SANTA CLARA CITY POWER

Capital Facility Plan, Impact Fee Facility Plan and Impact Fee Study

November 2016

PRELIMINARY – SUBJECT TO CHANGE / MODIFICATION

R. E. Pender, Inc.
P. O. Box 1567
Goldenrod, FL 32733
(407) 644-9795

Intermountain Consumer
Professional Engineers, Inc.
1145 East South Union Avenue
Midvale, Utah 84047
(801) 255-1111

Table of Contents

SECTION 1 - Background 1
1.1 Introduction 1
1.2 Impact Fees - General 1
1.3 Impact Fees - Utah 3
1.4 Santa Clara City and SCCP 4
1.5 Washington County 5
1.6 Electricity Supply & Demand 5
1.6.1 General 5
1.6.2 Electricity Supply 6
1.6.3 Transmission of Electricity 7
1.6.4 Distribution of Electricity 8
SECTION 2 - Capital Facilities Plan and Impact Fee Facilities Plan 10
2.1 General 10
2.2 Historical Population and Load Growth 10
2.3 Existing Electric Infrastructure and Future Needs 11
2.3.1 Generation 11
2.3.2 Transmission 12
2.3.3 Substations 13
2.3.4 Distribution 14
2.4 Level of Service Standards 15
2.5 Demands Placed on Existing Facilities 16
2.6 System Modeling for the CFP/IFFP 17
2.7 Model Results 19
2.8 IFFP Capital Projects and Costs 22
2.9 Certification of the IFFP 23
SECTION 3 - Impact Fee Analysis 24
3.1 General 24
3.2 Impact Fee Analysis 24
3.2.1 Identification of Impact Fee Projects/Costs 24
3.2.2 Impact Fee Demand Analysis 25
3.2.3 Calculation of the Impact Fee 26
3.3 Impact Fee Charges – Present and Proposed 27
3.4 Certification of the IFA 29

DRAFT

EXHIBITS

Exhibit 1 – Forecasted Customers, Energy and Demands, 2013 - 2032

Exhibit 2 – Impact Fee Projects / Costs

Exhibit 3 – Impact Fee Demand Analysis

Exhibit 4 – Base Impact Fee Calculation

Exhibit 5 – Summary of Charges – Present & Proposed Impact Fees

APPENDICES

Appendix A – Utah Statute U.C.A. 1953 § 11-36a-102

DRAFT

Section 1 - Background

1.1 Introduction

Santa Clara City Power ("the City," "Santa Clara" or "SCCP") engaged the services of Intermountain Consumer Professional Engineers, Inc. ("ICPE") who teamed with R. E. Pender Inc. ("Consultant") to conduct certain studies and analyses related to the development of an updated Electrical Power Capital Facilities Plan, Impact Fee Facilities Plan Update, and Impact Fee Analysis (collectively, "the 2016 Impact Fee Study"), the results of which will be implemented upon city council approval.

The 2016 Impact Fee Study was issued to update the previous study which was performed in 2006 by ICPE. This study was similar in scope to the current study and a similar methodology was used to create the updated study.

In conducting the subject study, certain publicly available information, data supplied by SCCP and electronic spreadsheets developed specifically for this engagement were utilized. In reaching the conclusions and recommendations discussed herein certain assumptions and considerations were made regarding future events and circumstances that may affect the ultimate outcome of the results. No assurances or guarantees are made as to the actual outcome of any assumption or consideration made in the development of these studies. However, it is believed that all assumptions and considerations made herein are appropriate and reasonable for purposes of the Impact Fee Study. In addition, certain information was obtained by the Consultant from other sources, all of which are believed to be reliable and reasonable for the purpose of this undertaking.

1.2 Impact Fees - General

Generally speaking, impact fees are used by government agencies (e.g., city and county governments) to fund certain capital-related expenditures (e.g., new infrastructure) incurred in providing governmental services to "new" development as mandated by law or ordinance. The basic philosophy behind the implementation of impact fees is that "new" development should bear the additional or "incremental" capital cost incurred in order to provide services to the "new" development. This establishes a cost causation or "nexus" requirement between the cost incurred in providing the service and those who benefit from the service. To be clear however, impact fees are not intended to recover annual operating

DRAFT

expenses (e.g., utility costs) or to pay for capital expenditures related to the correction of an existing deficiency in the service provided.

There are two generally recognized methods for calculating impact fees: the *inductive* method and the *deductive* method.

Under the *inductive* method, the cost and capacity of a particular facility is identified and used as the generic model for all future facilities. Take for example the cost of a new electrical substation having a construction cost of $2,000,000 and sized to serve approximately 5,000 residential dwelling units and 1,000,000 square feet of commercial space. In this very simple example, assuming the capital cost is recovered evenly (50% each) between residential and commercial loads, the impact fee would be determined as follows:

Residential	=	$2,000,000 x .50 / 5,000 = $200 per dwelling unit
Commercial	=	$2,000,000 x .50 / 1,000,000 = $1.00 per sq. foot.

An advantage to this method is that it is fairly straightforward and easy to implement. It also is not affected by changes to capital improvement plans or population estimates. The monies needed for the future capital requirement (like the electrical substation in the above example) will be available as soon as actual growth reaches the design levels, which may be any number of years down the road. A disadvantage of the inductive method is that the impact fee calculation is based on a generic model approach and, therefore, may not address the special needs of the community. It also may fail to capture all of the capital requirements associated with the project, including, for example the additional facilities that will be needed to support the primary project (e.g., required increases to the capacity of administrative support offices).

The *deductive* approach involves calculating the impact fee based on the anticipated additional demand (e.g., number of new residential dwelling units) on a facility or infrastructure used in providing services. Normally, the entity implementing the impact fee usually will have an established level of service ("LOS") standard for the particular service (e.g., 1 community park per 5,000 population) or alternatively, the current LOS (1 community park serving an existing population of 4,000) is used as the basis to determine the capital requirements underlying the impact fee calculation. In either case, once the LOS standard is known, it is a matter of applying that standard to future growth projections in

DRAFT

population and/or commercial space as reflected in a master plan and/or capital improvement plan to determine the new capital requirements.

An advantage of using the deductive method is that it will address the specific needs of the community when determining the future capital requirements. The downside is that this method requires much more detailed information to perform the calculations and must be updated periodically as changes in population projections, master plans, etc. occur.

The inductive and deductive methods are both valid and the use of one or the other will depend largely upon the information available and the specific circumstances of the community. In calculating the subject electrical impact fees for Santa Clara we have employed only the deductive approach.

1.3 Impact Fees - Utah

Almost all states have some form of impact fees and 26 of those states have statutes authorizing the use of impact fees. In Utah, impact fees are governed by state statute, specifically U.C.A. 1953 § 11-36a-102 (the "Statute"). A copy of the Statute is attached hereto as Appendix A.

Very generally, the Statute requires that each political subdivision imposing an impact fee shall, with some exceptions, (1) prepare an Impact Fee Facilities Plan (§ 11-36a-301), (2) perform an Impact Fee Analysis (§ 11-36a-303), (3) calculate the Impact Fee(s) (§ 11-36a-305) and (4) certify the Impact Fee Facilities Plan (§ 11-36a-306).

According to the Statute, the "Impact Fee Facilities Plan ("IFFP") shall identify (a) demands placed upon existing public facilities by new development activity; and (b) the proposed means by which the political subdivision will meet those demands." The IFFP shall also generally consider all revenue sources, including impact fees, used to finance impacts on system improvements. This report incorporates the system SCCP Capital Facilities Plan (CFP) by reference but noting that the primary difference between the IFFP and the CFP is that the IFFP considers only those projects that are brought about by future growth on the SCCP system. That is, certain projects identified in the CFP may be due to the correction of an existing deficiency and are therefore are not considered in the IFFP.

The Impact Fee Analysis ("IFA") portion of the Statute states that (1) "each local political subdivision or private entity intending to impose an impact fee shall prepare a written analysis of each impact fee:" and (2) "shall also prepare a summary of the impact fee analysis designed to be understood by a lay person." The requirements of the IFA include identifying the estimated impacts on existing capacity

DRAFT

and system improvements caused by the anticipated development activity. The political subdivision must also estimate the proportionate share of (i) the costs of existing capacity that will be recouped and (ii) the costs of the impacts on system improvements that are reasonably related to the new development activity.

The calculation of the Impact Fee may include the following:

(a) The construction contract price;

(b) The cost of acquiring land, improvements, materials, and fixtures;

(c) The cost for planning, surveying, and engineering fees for services provided for and directly related to the construction of the system improvements; and

(d) For a political subdivision, debt service charges, if the political subdivision might use impact fees as a revenue stream to pay the principal and interest on bonds, notes or other obligations issued to finance the costs of the system improvements.

Also, the Calculation of the Impact Fee must be based on realistic estimates and the assumptions underlying such estimates must be disclosed in the IFA.

Finally, a written certification shall be included in the IFFP and the IFA by the person or entity that prepared those requirements.

1.4 Santa Clara City and SCCP

Santa Clara City is located in southwest Utah in Washington County, approximately 120 miles northeast of Las Vegas, NV. The estimated population in 2014 was about 6,671 persons, nearly a 44 percent increase since 2000. The median resident age is 29.4 years and the median household income is about $64,000. The land area is 4.88 square miles and the population density is 1,366 people per square mile. The average household size is 3.5 persons.[1] Santa Clara can best be described as a suburban community since many of its residents commute to work in the City of St. George and other nearby business areas. Santa Clara, as well as the surrounding area has a rapidly

[1] Source: city-data.com.

DRAFT

growing population. The St. George metro area, of which Santa Clara is a part, was recently ranked as the fastest growing community in the United States in a recent U.S. Census report.

SCCP provides electric power, transmission and distribution services to its customers located within the corporate limits of the City. At present SCCP serves about 2,500 electric accounts. SCCP owns and operates the Fort Clara Power Station. Electric systems located contiguously to SCCP include St. George City Power and Rocky Mountain Power (RMP).

1.5 Washington County

According to the 2010 U.S. Census, the County's population was 138,115. Its county seat, as well as the largest city, is St. George having a population of nearly 73,000. The county has a total area of 2,430 square miles, of which 2,427 square miles is land and 3 square miles is water. The population density is about 37 people per square mile. Trade, transportation and utilities make up the largest sector of employment with the largest area employers being Intermountain Health Care, Dixie Regional Medical Center and Washington County School District. The annual per capital income is about $26,000.[2]

1.6 Electricity Supply & Demand

1.6.1 General

As illustrated in Figure 1-1 below, an electrical power delivery system is made up of three basic components or functions: electric generators that produce the power; a transmission system to deliver the power to the distribution system; and the distribution system which delivers the power to the end-user.

[2] Sources: Wikipedia.com and Washington County Economic Development Commission website: *www.dixiebusinessalliance.com/wcedc/*

DRAFT

Figure 1-1

Illustration of a Typical Power Delivery System

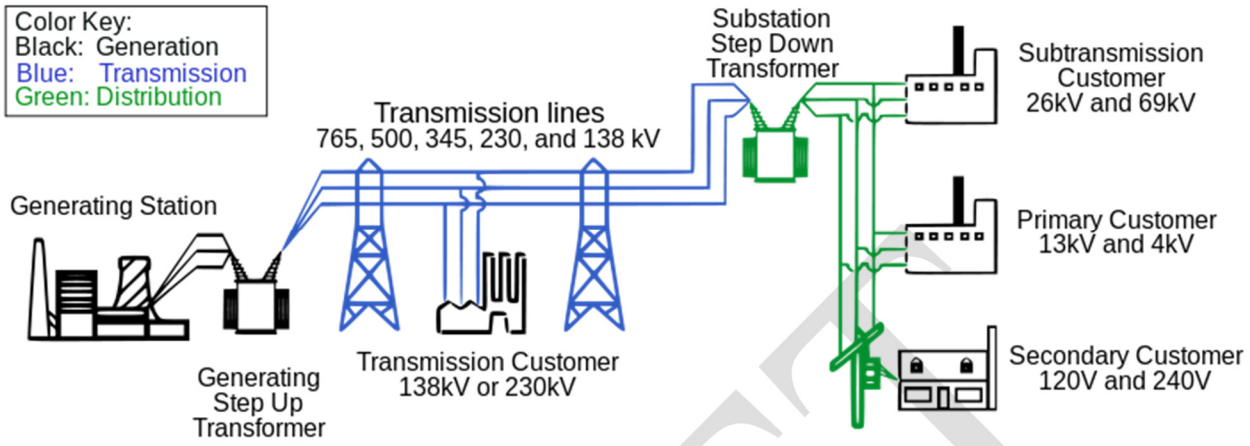

Source: en.Wikepedia.org

1.6.2 Electricity Supply

In any electrical system, electricity (measured in kilowatt-hours) is produced by a number of generation technologies, powered by a diversity of fuel resources. These generators may include steam (nuclear, coal and oil); hydroelectric (run-of-river and pumped storage); combined-cycle (natural gas and fuel oil); simple-cycle (natural gas and fuel oil); renewables (wing and solar) and internal combustion (diesel). The utility may also utilize generation supplied by others in the form of purchased power agreements, which can include firm power (long-term, interim and short-term); unit power (a purchase out of a specific generating unit) and non-firm (usually short-term). The type and amount of each generating resource that is utilized by the utility in meeting its hourly demand (measured in megawatts) for electricity at any point in time will depend primarily on the amount and duration of the demand, the availability of the generating units and the variable operating cost of the generating unit(s). Very simply, in meeting the daily demand for electricity, each available generating resource is stacked according to its operating cost (lowest to highest) and subsequently dispatched to meet the demand for electricity in each hour of the day. This so-called "merit" stacking/dispatch procedure can be illustrated as follows:

DRAFT

Figure 1-2

Illustration of a Load Duration Curve with Unit Stacking

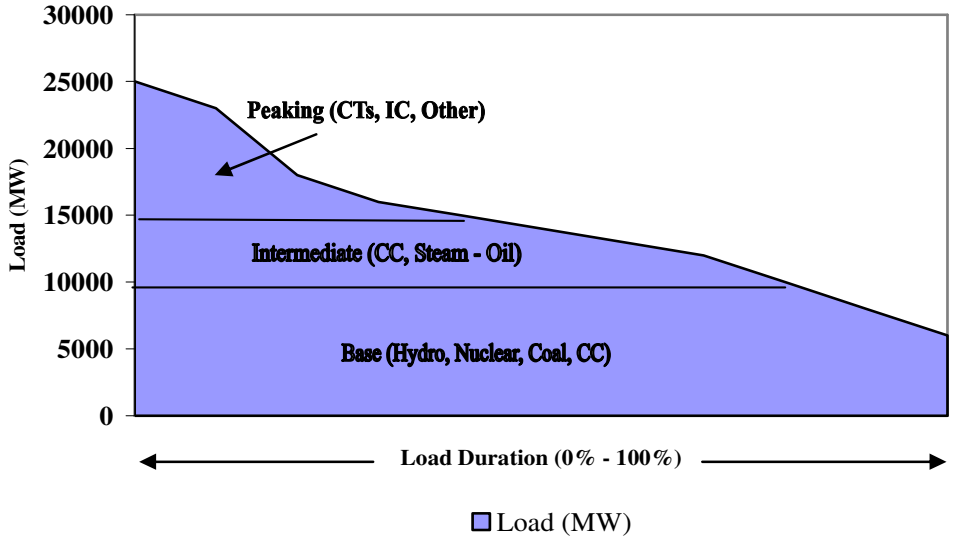

The utility's peak demand is the highest demand for electricity (measured in megawatts) recorded in any one hour (based on a 15, 30 or 60 minute interval) and occurring within a specified time period (day, week, month, year or seasonal (summer, winter). It is during these peak periods that a utility will utilize its entire portfolio of generating resources including its peaking generating resources such as combustion turbines. However, because of their relatively high operating costs, combustion turbines are usually called upon for only a very short period of time – when the utility's peak demands are at the highest levels.

1.6.3 Transmission of Electricity

Immediately after leaving the generator, electricity is transformed (i.e., stepped up to a higher voltage) for delivery to the utility's high-voltage ("H-V") transmission system. Generally, the H-V transmission system consists of the towers, conductor, substations and other equipment necessary to deliver power from the various generating stations to the utility's distribution system or to other utilities interconnected with the H-V transmission system. H-V transmission system voltages typically range from 115 kilovolts to 500 kilovolts. A power transmission system is sometimes referred to colloquially as a "grid." Redundant paths and lines are provided so that power can be routed from any power plant to any load center, through a variety of routes, based on the economics and physical characteristics of the

transmission path and the cost of power. Much analysis is done by transmission system owners to determine the maximum reliable capacity of each line, which, due to system stability considerations, may be less than the physical or thermal limit of the line. The H-V transmission system is continually monitored for potential "over-loading" conditions and utilities will sometimes be called upon to reduce/increase output at certain generating plants in order to relieve the condition. The location of generating plants in relation to the electricity load on the H-V transmission system is a very important consideration in utility planning. Needless-to-say, because of aesthetic, environmental, political, regulatory and other factors, generating plants and the transmission lines making up the "grid" can rarely be placed in the optimum location allowing for the for most efficient utilization of electric system. Transmission bottlenecks or "constraints" as they are typically referred to are sometimes created because the transmission grid is not configured or sized correctly to allow for the uninterrupted flow of power from the generating plant to the load centers experiencing the highest demand. Moreover, the level and duration of the constraint can vary depending on amount of load on the system, unit outages, and events affecting the flow of power.

1.6.4 Distribution of Electricity

Electricity distribution is the final stage in the delivery of electricity to end-users. A distribution system's network carries electricity from the transmission system and delivers it to consumers. Generally, a typical electric distribution system would include medium-voltage (e.g., 12.47 kV - 46 kV) power lines, substations, switches, poles, transformers, service drops and metering. The distribution system begins as the voltage is stepped down (e.g., 69 kV / 12.47 kV), via the substation transformer(s) and ends as the secondary service enters the customer's meter socket. Distribution circuits begin at the low-voltage side of the transformer located in the substation.

Conductors for the distribution delivery system are either located overhead on utility poles, or buried underground in the case of urban, downtown areas or new developments. Urban and suburban distribution is normally three-phase in order to serve all types of customers; residential, commercial, and industrial.

Most electric customers are connected to a transformer (pole mounted or ground level protective enclosure), which reduces the distribution voltage to the relatively low voltage used by lighting

DRAFT

and interior wiring systems. Each customer has an "electrical service" or "service drop" connection and a meter for billing.

DRAFT

Section 2 - Capital Facilities Plan and Impact Fee Facilities Plan

2.1 General

As discussed above, the Impact Fee Facilities Plan ("IFFP") shall, in accordance with the Statute, identify (a) demands placed on existing public utilities by new development activity; and (b) the proposed means by which the local subdivision will meet those demands. In addition, each local political subdivision shall generally consider the revenue sources that will be used to finance the impacts on system improvements.

The IFFP, as discussed herein, is based largely on the Capital Facilities Plan Update, dated August 2015, prepared by ICPE. Certain parts of that report, which is incorporated herein by reference, are summarized in the following discussion of the CFP/IFFP.

2.2 Historical Population and Load Growth

According to the U.S. Census Bureau, the City had a population of approximately 6,671 in 2014. As depicted in the following table, the current population is the result of tremendous growth that occurred during the last two decades (1990 – 2010).

Table 2-1
Santa Clara City Historical Population

Historical population		
Census	**Pop.**	**%±**
1960	291	
1970	271	-6.9%
1980	1,091	302.6%
1990	2,322	112.8%
2000	4,630	99.4%
2010	6,003	29.7%
Est. 2014	6,671	11.1%

The City consistently experienced a high rate of growth during the 80's and 90's and then slowed somewhat during the period 2000 – 2010 primarily due to the economic downturn beginning in 2008.

Historical growth indicates a relatively high growth rate as occurred from 1991 through 2008. Examination of the past five years shows a relatively small growth and directly coincides with a down turn in economic conditions. The last two years have seen a renewed interest in development in the area.

DRAFT

However, due to a stalled economic recovery growth is projected to be approximately 3.5% annually for the next five years or more. Because of Santa Clara City's location, continued interest of developers, favorable interest rates for investment, and the availability of manpower resources, it is expected that a high growth rate will return in coming years and should be closely monitored over the next five years. If growth accelerates above projections of system improvements must also be accelerated. The annual historical load growth since 1991 is presented in the following Table 2-2.

Table 2-2
Santa Clara City
Electrical Load History

Year	Summer Peak (kW Demand)
1991	3,042
1995	4,802
2000	7,639
2001	7,253
2002	8,987
2003	10,142
2004	10,427
2005	11,980
2006	12,030
2007	12,880
2008	12,430
2009	13,310
2010	12,770
2011	12,800
2012	13,900
2013	13,970
2014	13,150
2015	14,400

2.3 Existing Electric Infrastructure and Future Needs

2.3.1 Generation

Santa Clara City has an existing power plant with 2-2MW generator units. The Plant, as constructed, has the ability to add 4 additional units. As loads grow, or as existing resource contracts expire, the addition of generation should be considered as a part of Santa Clara City's overall resource mix. Unit(s) would likely be used as peak saving units.

DRAFT

Consideration for the addition of generation should include installation costs, long term operating cost and long term fuels cost verses replacement power cost during peak periods.

2.3.2 Transmission

Santa Clara City takes metered delivery at 69 kV. The City owns and operates approximately three miles of 69 kV sub-transmission line. This is a radial line that interconnects with a UAMPS radial 69 kV line on the east side of the City and extends to the City's two distribution substations and the city's power plant. On an emergency bases, the 69kV line has the ability to connect to Rocky Mountain Power's (RMP) 69kV system on the west side of the City through a normal open interconnection point. As indicated, the RMP interconnection point is an established emergency interconnection point for both Santa Clara City and RMP. Use of the emergency interconnection point is by either party is subject to "the ability to serve" and is not a binding requirement.

System studies indicated that the existing transmission does have the capacity to serve expected load through the period 2015 to 2020 and beyond.

The radially fed substations are vulnerable to extended outage if disruption to service occurs on the UAMPS or Santa Clara City 69 kV lines. In previous studies, ICPE has recommended that long term future plans include a 69 kV loop within the City and interconnection to a second power delivery point. In recognition of long term system requirements, and to maintain the current level of service, Santa Clara City Power has secured interconnection right to St. George City's Green Valley substation. ICPE recommends that interconnection to the Green Valley substation be maintained in the long range plan. The Green Valley interconnection will increase system reliability and provided additional transmission capacity. With appropriate switching capability at each substation, the second interconnection point and loop will allow the City to maintain transmission service to each substation during abnormal operating conditions. These might include line maintenance work or an outage to any segment of the loop. This versatility will enhance the City's ability to operate the electrical system and improve service reliability to all City customers.

DRAFT

As a member of UAMPS, Santa Clara City has participated in required transmission system upgrades external to the Santa Clara City service area as required by its power contracts. The Washington County system upgrades are identified through the Southwest Utah Technical Studies Group that include UAMPS, Santa Clara City, St. George, Washington City, Hurricane, PacifiCorp, and Dixie-Escalante. Through the coordinated efforts substantial transmission system upgrades have occurred over the past 10 years.

The 2015 Southwest Utah Joint Study Report indicates several projects within the period of this Work Plan (2015 to 2020) that should occur in the Washington County area. Of the listed projects, only two projects could require UAMPS/Santa Clara City involvement. The projects included a 138–69 kV substation in the Hurricane area, indicated to be in service by 2018; and extension of 345 kV to the UAMPS/PacifiCorp jointly owned St. George Substation in the 2020 time Frame. The needs for the projects are growth dependent and the 345 kV project will likely be extended beyond the scope of this study.

2.3.3 Substations

Santa Clara City is served by a radial 69 kV line owned by UAMPS. The City has two substations, Paul Grimshaw and Parley Hassell. These substations step the voltage from 69 kV to 12.47 kV for distribution delivery to City customers. The City-owned 69 kV transmission line is 4/0 AWG ACSR. It connects the Parley Hassell Substation and the Paul Grimshaw Substations and then continues west and south to the "normal open" emergency interconnection point with Rocky Mountain Power 69 kV line. This line is able to supply up to 30 MVA of electrical power to the City system before reaching an overload condition during high temperature conditions.

Good engineering practice requires that the electrical system be able to withstand the loss of a single substation transformer (typically the largest on the system), without leaving any customers out of power. This is most often referred to as the "N-1" condition. In order to meet this requirement, loading of the substation transformers should not exceed the normal capacity of the substation transformer. The remaining capacity is then available to provide power to customers who would otherwise be without power when a substation transformer fails. If any one of the substation transformers in the system fails, the remaining transformers and distribution main feeder lines can continue to serve the entire load. It is critical that adequate ties are created between distribution circuits to allow load transfers from one circuit

DRAFT

to another or from one substation to another. These interconnection points on the distribution system are best accomplished with three-phase gang-operated airbreak switches for overhead or with pad-mounted three-phase operated switchgear for underground applications.

Load growth projections show that an additional substation transformer (10/12/14.4 MVA) will be necessary in the Paul Grimshaw Substation to maintain the current level of service and facilitate load growth. Two additional distribution circuits will likely be required to supply power to the expanding developed area. *(Note: this project has been completed as of the finalization of the IFA. Associated capital costs have therefore been removed from the IFA.)*

Long-range projections indicate a need for the construction of the South Hills Substation, located in the City on the south side of the Santa Clara River. This substation will be needed to serve customers that build in that part of town and to provide load relief to the Parley Hassell and Paul Grimshaw substations. Distribution circuits need to be built into the area as the load develops. The substation would need to be built when existing distribution feeders cannot maintain adequate voltage in the area, when the adjacent substation transformers do not have sufficient capacity to support the load, or when the reliability of the circuit is no longer acceptable.

Note: In cold weather, substation transformers can be temporarily loaded above the maximum rating. ANSI Standard C57.92 provides a guide for loading transformers at various temperatures. The standard indicates that if the average daily temperature is 30° F, a transformer can be loaded to about 120% of nameplate rating with the same life expectancy as if it were loaded to nameplate. If the average daily temperature exceeds 86° F, the transformer loading should be reduced below nameplate rating. Average daily temperature of 86° F is often exceeded in the Santa Clara City area. This requires that the loading on each substation transformer during the summer peaking time be maintained below the nameplate rating.

2.3.4 Distribution

General guidelines for main feeder distribution line construction are included in the distribution section. The guidelines emphasize construction of power lines with capacity to handle current and expected future load, provide backup capacity, maintain reliability, and minimize losses.

DRAFT

The long-range planning map included with the capital facilities plan shows prospective routes for new main feeder distribution lines. The lines typically run along existing and future road right-of-ways, as shown on the Santa Clara City General Plan.

The distribution routes on the long-range map are intended as a general guide to aid in planning new distribution facilities. Line routing will vary from the plan depending on when and where development occurs as well as the actual alignment of the roads at the time of construction.

The present 12 kV distribution system has adequate capacity to handle existing load, under normal conditions, with limited backup capacity for some contingency situations. As the load continues to grow it will require changes to the distribution system to maximize the use of the existing installed substation capacity, including new and upgraded main feeders between substations to allow for load transfers and proper backup capabilities. Other modifications and additions will be projected through the term of the study. New distribution feeders to serve growth areas should be engineered to provide for overall distribution feeder system reliability improvement. Ongoing engineering evaluation of the distribution system is recommended to prevent low voltage and overloaded facilities, provide for power factor correction, maintain over-current coordination, and provide backup capacity to maintain reliability. Mapping of facilities serving newly developed areas will be increasingly critical as electrical facilities expand and more complex service configurations are installed.

2.4 Level of Service Standards

The City plans, designs and operates its system based on the following criteria:

- Transformer ratings under varying load levels and loading conditions must remain below their base rating;
- The system must be able to adequately serve load under single contingency (N-1) situations, where "N" is a powersystem element such as a transformer or line;
- The system switching required under an N-1 contingency should remain as simplified as possible to ensure thatswitching orders not become unnecessarilycomplex
- Distribution circuit loading criteria must remain below 90% of its maximum current rating;
- Primary circuit voltage must remain between 95% and 105% of its nominal value; and
- Distribution circuit mains must be able to serve additional load under N-1 contingencies.

DRAFT

The above criteria were used to determine Santa Clara's future facility needs based on the amount of load (i.e., demand) placed on the existing system over a pre-determined CFP/IFFP planning horizon (e.g., one, three, six, ten and twenty years).

2.5 Demands Placed on Existing Facilities

The demand placed on an electric system is typically measured in kilowatts (kW) or kilovolt-amperes (kVA) and stated as either coincident-peak ("CP") demand or non-coincident peak ("NCP") demand. The system CP demand is typically the maximum hourly demand for the entire system measured over some time period (e.g. week, month, year); i.e., the point in time where the sum of all demands placed on the system are the highest for the system as a whole. The NCP demand represents the sum of the maximum demands of individual customers or customer classes (e.g., residential, commercial, industrial) measured or estimated for a time period. The CP demand represents the combined loads across all customer classes measured at the system level where the NCP demand represents the total demand the system would be subject to if all customer classes peaked at the same time. The CP demand by definition will always be lower than the NCP demand. For purposes of determining Impact Fees, CP represents the demand placed on the existing system as a whole, while NCP reflects the maximum demand placed on local facilities by individual customer classes (e.g., residential and commercial) . The CP demand is normally the demand that a utility plans for when sizing facilities that will be used to meet future growth on the system. However, each individual piece of equipment must be able to support its own individual peak demand even if that demand does not occur at the same time as the system's CP. Therefore, it is the NCP demand that is used to determine the Base Impact Fees discussed later in Section 3.

The analysis of the City's projected demands for the CFP/IFFP one, three, six, ten, and twenty year plans through 2032, is shown in Exhibit 1 attached hereto and summarized hereunder in Table 2-3**.**

Table 2-3
Summary of CP and NCP Demands
For the Period 2016 through 2035

Description	2016 1 Year	2018 3 Year	2021 6 Year	2025 10 Year	2035 20 Year
Total System CP Demands (kW)	14,900.0	15,965.0	17,615.1	19,825.9	25,378.8
Total System NCP Demands (kW)	16,828.8	18,149.6	20,130.8	22,772.4	29,376.4

DRAFT

The System CP Demands for the 5-year planning period (2016 – 2020) were developed by ICPE and reviewed by the Consultant. The Consultant extended the planning period forecast to 2035 for purposes of the IFA. From the Load Forecast in Exhibit 1, the Estimated NCP Demands (measured at the meter) shown on lines 24-27 were computed based on the Projected Energy Sales (shown on lines 4-7) and the following assumptions and considerations:

- Residential customer growth will average approximately 80 new connections per year and was correlated to the anticipated population growth. Approximately 10 customers are assumed to be added to the Commercial class each year while no growth was assumed for the Agricultural class.
- Growth in Average Annual Usage per Customer (lines 36-38) for residential, commercial and other customer classes was assumed to be nil due to increases in appliance efficiencies and demand side management programs.
- Estimated NCP Load Factors (lines 39-41) were assumed to be: Residential – 25%; Commercial – 30%; and Agricultural – 30%.
- The System Load Factor (line 3) was assumed to average just slightly above 30% and approximates recent historical loading patterns for the system and was determined by historical loading.

As discussed later in Section 3, it is the estimated change (i.e., increase) in the Total System CP Demand from 2015 to 2020 that is used as the starting point for calculation of the Impact Fees. Based on FY 2015 metering data the system CP was 14,400 kW and the total system load was 38,167,181 kWh. By dividing the system load by the number of hours in the year (8,760 hrs.) and dividing that number by the system CP we get an average system load factor of 30.26%.

2.6 System Modeling for the CFP/IFFP

The CFP/IFFP study considers the electrical load growth within the Santa Clara City Power service area. To evaluate system performance under existing and projected peak load conditions, a computer model of Santa Clara City's power system was developed using SKM software and load flow simulations performed. Computer system analysis indicates that the current level of service is within Santa Clara City Power's level of service standard and acceptable utility practice. From the simulations, and system evaluation, projects that are necessary to accommodate load

DRAFT

growth in the next five years were identified. These projects are required to maintain the proper level of service as the load in the SCCP system increases.

Projects that are proposed in the Plan are listed in the following section with the recommended completion date and the estimated cost of the project in 2015 dollars. Actual timing of these projects may vary depending on the actual load growth of the electrical system.

The load forecast identified expected loads for existing substations, as well as the addition of an additional substation transformer in the Paul Grimshaw Substation. Load transfers between substations were shown on the basis of maximizing the utilization of existing substation transformers. Capacity additions are only scheduled when the transfer of load to adjacent substations would result in overloading those facilities due to new growth. Maximizing the utilization of existing and future resources produces the least cost option. Distribution facilities are planned for construction in the time frames necessary to facilitate the load transfers as dictated by the system growth and identified through this study. Backup capacity for substation transformers/equipment, provisions for improved transmission and distribution reliability and addition of generation are also issues addressed in the CFP study.

Under current city boundaries, Santa Clara City has limited area for growth but can still support growth for some time. Major growth is expected to occur in the North Town Area and South Hills area (area south of the river and within city boundaries).

Long-term distribution plans identified in the CFP are intended as a guide to be followed as service is provided for new customers. Most new construction can be delayed until forecasts are certain. However, duplication and waste can be avoided if conformance to the City's master plan is verified before line improvements or extensions are made. The long-term plans are speculative and should be adapted as circumstances change, such as the location of electrical load and routing of streets. The City should use the long-term plans as a guide to assure proper Right-of-Ways are obtained as each development is approved. Another benefit of following the long-term plan is to assure that feeder cables installed will be properly sized to meet the future needs of the area. This will

DRAFT

minimize the need to upgrade these cables in the future. Having adequate right-of-ways secured in advance will streamline the construction process for the City Power Department.

Prospective locations for main distribution feeders in Santa Clara City are shown on the Long-term Planning Map of the CFP. The map also shows existing main feeders, existing interconnection points, and proposed interconnection points between feeders. New feeder routes may need to be selected to supply load in the northeast and southwest part of the City. As these areas develop, heavy backbone feeders need to be extended along major streets. Main feeders from each substation should intersect to form a looped system. This will permit load to be transferred between substations, and will establish alternate sources of power during outages or for maintenance work.

2.7 Model Results

The following Project Summary details the anticipated projects and expenditures necessary to sustain the projected growth rate for Santa Clara City's electrical system for the next 5 years. Additionally, Table 2-4 contains major projects that may be necessary shortly beyond the 5 year horizon of this study.

1. Install 2nd 10/12/14 MVA substation transformer bay in the Paul Grimshaw Substation. *(Note: project has been completed.)*
2. Install approximately 0.5 mile 750 URD circuit #4 from Paul Grimshaw Substation to Rachel (Commercial/residential Area).
3. Perform Overcurrent Protection Coordination Review.
4. Extend 69kV transmission, with 15kV under build to south hills development area (0.75 miles) and interconnect underbuilt to existing URD circuit.
5. Install 750 URD circuit - Hamblin to Rachel along North Town (0.5 mile).
6. Install 750 URD circuit – Claude to Arrowhead (0.78 mile).
7. Power Factor correction Study and capacitor banks as determined.
8. Generation Addition.

There is greater confidence in projecting requirements for 2 to 3 years than there is for a 5-year outlook. However it is necessary to forecast future projects due to the magnitude (and cost) of the modifications

DRAFT

necessary should the annual rate of growth exceeds projections. Substation, distribution, and transmission line requirements need to be addressed to meet future needs of the City in a timely fashion.

The proposed projects, as listed above and in Table 2-4, will provide a method for Santa Clara City to plan and budget for the facilities necessary to serve the anticipated electrical load growth while maintaining the current level of service.

The projects were developed based on the following parameters:

1. 3.5% load growth over Existing Santa Clara City Substations would be served at 69 kV and the proposed new substation would be served at 69 kV by a new transmission line to be built from the City Service Center to the new substation site.
2. To minimize expenditures and the capital procurement of new equipment, existing substation transformers and equipment would be utilized as long as possible.
3. Backup capacity would have to be built into the distribution system for load transfers between substations in order to defer purchasing additional substation transformers.
4. Maintain current level of service.

DRAFT

TABLE 2-4
Santa Clara City
CFP and IFFP
Generation, Transmission, Distribution, and Substation Projects

All Estimates Are In 2015 Dollars

Item and Description	Item Cost	Total For Year		Running Total
2015/2016				
1. Install 2nd 10/12/14 MVA substation transformer, 69kV breaker, regulators with two additional circuits in the Paul Grimshaw Substation. *(Project completed.)*	$560,000			
2015/2016 Total Estimate	**$560,000**	**$560,000**		**$560,000.00**
2017				
1. 750 URD circuit #4 from Paul Grimshaw Substation to Rachel, w/ two PME switchgear.	$240,000			
2. Overcurrent Protection Coordination Review	$30,000			
2017 Total Estimate	**$270,000**	**$270,000**		**$830,000.00**
2018/2019				
1. Extend 69kV transmission, with 15kV under build to south hills development area (0.75 miles) and interconnect underbuilt to URD circuit.	$265,000			
2. 750 URD circuit - Hamblin to Rachel along North Town, w/ two PME switchgear.	$218,000			
3. 750 URD circuit – Claude to Arrowhead, w/three PME.	$377,000			
2018/2019 Total Estimate	**$860,000**	**$860,000**		**$1,690,000.00**
2020				
1. Capacitor Bank (s) Installation	**$35,000**			
2. 1-2MW Generator Addition	**$2,500,000**			
2020 Total Estimate	**$2,535,000**	**$2,535,000**		**$4,225,000.00**
2015 to 2020 Total Estimate				**$4,225,000.00**
Beyond 2020				
1. South Hills Substation, 10/12/14 MVA Power Transformer, 2 - 69kV Breakers	$2,200,000			
2. Extend 69kV and underbuilt to substation (0.5 mile)	$200,000			
3. Extended 69kV to Green Valley Substation (4.0 miles)	$800,000			
2020 thru 2023 --Total Estimate	**$3,200,000.00**			

DRAFT

2.8 IFFP Capital Projects and Costs

As previously mentioned, the costs for the above projects are estimated in 2015 dollars. As with most capital facilities plans, the majority of these projects are scheduled to occur in the earlier planning windows. However, growth in demand on the system generally happens in "groups" or "lumps" according to actual commercial and residential development. Because residential developments are generally in subdivision form and commercial developments are generally grouped around a single location, many of the sub-areas in the IFFP area may not realize the growth modeled; therefore, some of the projects could, in reality, be delayed until required by localized growth. In contrast, it is possible that projects may need to be accelerated if growth in an area occurs faster than anticipated.

DRAFT

2.9 Certification of the IFFP

I certify that the attached Impact Fee Facilities Plan:

1. includes only the costs of public facilities that are:
    a. allowed under the Impact Fees Act; and
    b. actually incurred; or
    c. projected to be incurred or encumbered within six years after the day on which each impact fee is paid;
2. does not include:
    a. costs of operation and maintenance of public facilities;
    b. costs for qualifying public facilities that will raise the level of service for facilities, through impact fees, above the level of service that is supported by existing residents;
    c. an expense for overhead, unless the expense is calculated pursuant to a methodology that is consistent with generally accepted cost accounting practices and the methodological standards set forth by the federal Office of Management and Budget for federal grant reimbursement;

CERTIFIED BY:

Signature: Ricky L. Hansen

Name: Rick Hansen

Title: ICPE, Senior Engineer

Date: November , 2016

DRAFT

Section 3 - Impact Fee Analysis

3.1 General

As discussed in Section 1, the IFA portion of the Statue requires that each local political subdivision intending to impose an impact fee prepare a written analysis of each impact fee. It also requires that IFA include a summary designed to be understood by a lay person. Additional requirements include identifying the estimated impacts on existing capacity and system improvements caused by the anticipated development activity. The political subdivision must also estimate the proportionate share of (i) the costs of existing capacity that will be recouped and (ii) the costs of the impacts on system improvements that are reasonably related to the new development activity.

3.2 Impact Fee Analysis

The Impact Fee Analysis involved three (3) basic steps or sub-analyses: (1) an Impact Fee Cost Analysis; (2) an Impact Fee Demand Analysis; and (3) the Calculation of the Impact Fee.

3.2.1 Identification of Impact Fee Projects/Costs

The Impact Fee Cost Analysis for current and future projects is shown in the attached Exhibit 2. Page 1, Column (a) of this exhibit shows the costs (in 2015 dollars) of the projects identified in the CFP while column (b) is a restatement of project costs in the year of the expenditure, assuming an inflation rate of 2.5 percent per annum. Column (c) shows the percentage of costs to be allocated for recovery through the proposed Impact Fees. As shown in column (c), all of the projects identified in the CFP are determined to be 100 percent related to new development on the SCCP system and therefore recoverable through Impact Fees. Column (d) is simply the product of columns (b) and (c). The Impact Fee projects have, by necessity, been delineated between those projects that will be funded directly through impact fees and others that will be funded from future bond financings; the total cost of which (principal and interest) will be recovered through Impact Fees over the life of the bond issue (i.e., 20 years). Only one project is anticipated to be funded through future bond financings – a 2 MW generator to be installed in 2020. The total amount of project costs to be recovered through Impact Fees as shown in Exhibit 2 is summarized in the following Table 3-1.

DRAFT

Table 3-1
Total Costs of Current and Future Projects
Eligible for Recovery through Impact Fees

Description	Total Cost
Projects Directly Funded Through Impact Fees	$1,241,509
Projects Funded Through Bond Financings *	2,759,532
Total Project Costs	$4,001,042

* Dollar amount shown excludes interest on debt.

3.2.2 Impact Fee Demand Analysis

The Impact Fee Demand Analysis is presented in Exhibit 3. This analysis calculates the Demand Placed on the Existing System to be used as the denominator in determining the Impact Fee by customer class (i.e., Residential, Commercial and Agricultural) and for the total system. The first step was to determine the increase in the CP demand over two distinct recovery periods: a 5-year Recovery Period (2016 – 2020) and a 20-year Recovery Period (2016 – 2035). A 20-year Recovery Period was used for the one project (i.e., 2-MW generator) that will be funded through a future bond financing. The increase in CP Demand is shown on line 3 of Exhibit 3 which, for the total system, is 2,702.0 kW for the 5-year Recovery Period and 10,978.8 kW for the 20-year Recovery Period. The increase in total system NCP demand (at the meter) is 3,302.0 and 13,208.0 over the 5-year and 20-year recovery periods, respectively (see line 8). Lines 9-13 of show the increase in customers over the two planning horizons and the estimated average CP demand and NCP demand placed on the system per customer added. The NCP demand per customer provides the basis for determining the customer panel utilization percentages used in the Proposed Impact Fee for each customer classification, discussed below. You will notice that for the Agricultural customer class, it has been assumed there will be no increase in number customers or demand over the entire 20-year forecast. The Impact Fee Demand Analysis is summarized in Table 3-2 below.

DRAFT

Table 3-2
Impact Fee Demand Analysis
By Customer Class and Total System

Description	5-Year Recovery Period	20-Year Recovery Period
NCP Demand at Meter (kW)		
Residential	2,624.8	10,499.2
Commercial	677.2	2,708.8
Total System NCP Demands (kW)	3,302.0	13,208.0

3.2.3 Calculation of the Impact Fee

The calculation of the Base Impact Fee is presented in Exhibit 4 and summarized below in Table 3-3. Lines 1-4 of Exhibit 4 reflect the total Impact Fee project costs to be recovered for Future and Current Projects over the two recovery periods. These costs include the project financing costs (line 3) applicable to the bonded projects (i.e., the 2 MW generator). Two additional adjustments (lines 5 and 6) were made in order to determine the net project costs to be recovered through impact fees. The first adjustment was to add unrecovered historical growth-related projects; that is, past impact fee projects for which the total cost has yet to be recovered. Only one such project (i.e., the City Administration Building) was identified as being growth-related and having unrecovered project costs. SCCP is responsible for the department's share of the cost to construct the new City Hall and Administration Building. Based on information provided by the City, the Power Department's share is of the subject costs is $205,290. The second adjustment was to subtract the current balance of unused Impact Fee funds which amounts to $450,000. After making the two adjustments, it resulted in the total net project costs to be recovered through Impact Fees shown on line 7. The amounts on line 7 were then restated at various recovery levels (100%, 75% and 50%) as presented on lines 8-10. The various recovery levels are designed to allow the City Council to consider the appropriate Impact Fee it wishes to implement, taking into account such things as economic development goals and the residual effect on electric rates (i.e., the portion of project costs that are not recovered from Impact Fees will need to be recovered through electric rates).

The increase in NCP demand measured at the meter is shown on lines 11 through 13; the total of which is used as the denominator for calculating the base impact fee. The base impact fee at various recovery levels is presented on lines 14 through 16 and is simply determined as the total impact fee project costs

DRAFT

to be recovered (lines 8 – 10) divided by the increase in total system NCP demand (line 13). Following is a summary of the calculation of the base impact free at the various recovery levels.

Table 3-3
Summary of the
Base Impact Fee Calculation

Description	5-Year Recovery Period	20-Year Recovery Period	Total
Total Project Costs to be Recovered			
100%	$791,509	$4,575,248	$5,366,758
75%	593,632	3,431,436	4,025,068
50%	395,755	2,287,624	2,683,379
Total System NCP Demands (kW)	3,302.0	13,208.0	
Base Impact Fee ($/kW)			
100%	$239.71	$346.40	$586.11
75%	179.78	259.80	439.58
50%	119.85	173.20	293.05

3.3 Impact Fee Charges – Present and Proposed

A summary of Impact Fee charges for the Residential and Commercial customer classes is provided in the attached Exhibit 5. The estimated charges, by selected electric panel size, have been calculated under each of the proposed Impact Fees as compared to the current Impact Fee. The calculation of the Impact Fee charge is based on the following:

Equation 1 – Single Phase Service:

$$Impact\ Fee\ Charge\ = IF_b\ \times PUF \times \left(PS\ \times \left(\frac{V}{1{,}000}\right) \times PF\right)$$

Where: IF_b = Base Impact Fee

PUF = Average Panel Utilization Factor

PS = Panel Size (amperage)

V = Line-to-line Voltage

PF = Estimated Power Factor

DRAFT

Equation 2 – Three Phase Service:

$$Impact\ Fee\ Charge\ = IF_b\ \times PUF \times \left(\sqrt{3} \times PS\ \times \left(\frac{V}{1{,}000}\right) \times PF\right)$$

Where: IF_b = Base Impact Fee

PUF = Average Panel Utilization Factor

PS = Panel Size (amperage)

V = Line-to-line Voltage

$\sqrt{3}$ = 1.732

PF = Estimated Power Factor

The Panel Utilization Factor (15.0% - Residential; 17.5% - Commercial) shown on lines 2 and 3 of Exhibit 5 are based on the estimated per-customer NCP demand calculated on Exhibit 1. The Power Factor (90% - Residential; 85% - Commercial) was determined from research of available industry literature.

Charges under the currently effective Impact Fee schedules, shown under column (a) of Exhibit 5, are calculated using a base fee of $773.00 per kW (based on the data and information provided by SCCP). Charges calculated based on the Proposed Impact Fee under each of the assumed recovery levels is shown in columns (b) through (d) of Exhibit 5.

DRAFT

3.4 Certification of the IFA

I certify that the attached Impact Fee Analysis:

1. includes only the costs of public facilities that are:
    a. allowed under the Impact Fees Act; and
    b. actually incurred; or
    c. projected to be incurred or encumbered within six years after the day on which each impact fee is paid;
2. does not include:
    a. costs of operation and maintenance of public facilities;
    b. costs for qualifying public facilities that will raise the level of service for facilities, through impact fees, above the level of service that is supported by existing residents;
    c. an expense for overhead, unless the expense is calculated pursuant to a methodology that is consistent with generally accepted cost accounting practices and the methodological standards set forth by the federal Office of Management and Budget for federal grant reimbursement; and
3. offsets costs with grants or other alternate sources of payment; and
4. complies in each and every relevant respect with the Impact Fees Act.

CERTIFIED BY:

Signature _____

Name: Robert E. Pender, ASA

Title: President

Company: R. E. Pender, Inc.

Date: November , 2016

DRAFT

APPENDIX A
UTAH STATUTE U.C.A. 1953 § 11-36A-102

West's Utah Code Annotated Currentness
Title 11. Cities, Counties, and Local Taxing Units
Chapter 36A. Impact Fees Act
Part 1. General Provisions
§ 11-36a-102. Definitions

As used in this chapter:

(1)(a) "Affected entity" means each county, municipality, local district under Title 17B, Limited Purpose Local Government Entities--Local Districts, special service district under Title 17D, Chapter 1, Special Service District Act, school district, interlocal cooperation entity established under Chapter 13, Interlocal Cooperation Act, and specified public utility:

(i) whose services or facilities are likely to require expansion or significant modification because of the facilities proposed in the proposed impact fee facilities plan; or

(ii) that has filed with the local political subdivision or private entity a copy of the general or long-range plan of the county, municipality, local district, special service district, school district, interlocal cooperation entity, or specified public utility.

(b) "Affected entity" does not include the local political subdivision or private entity that is required under Section 11-36a-501 to provide notice.

(2) "Charter school" includes:

(a) an operating charter school;

(b) an applicant for a charter school whose application has been approved by a chartering entity as provided in Title 53A, Chapter 1a, Part 5, The Utah Charter Schools Act; and

(c) an entity that is working on behalf of a charter school or approved charter applicant to develop or construct a charter school building.

(3) "Development activity" means any construction or expansion of a building, structure, or use, any change in use of a building or structure, or any changes in the use of land that creates additional demand and need for pub-

© 2012 Thomson Reuters. No Claim to Orig. US Gov. Works.

lic facilities.

(4) “Development approval” means:

(a) except as provided in Subsection (4)(b), any written authorization from a local political subdivision that authorizes the commencement of development activity;

(b) development activity, for a public entity that may develop without written authorization from a local political subdivision;

(c) a written authorization from a public water supplier, as defined in Section 73-1-4, or a private water company:

(i) to reserve or provide:

(A) a water right;

(B) a system capacity; or

(C) a distribution facility; or

(ii) to deliver for a development activity:

(A) culinary water; or

(B) irrigation water; or

(d) a written authorization from a sanitary sewer authority, as defined in Section 10-9a-103:

(i) to reserve or provide:

(A) sewer collection capacity; or

(B) treatment capacity; or

(ii) to provide sewer service for a development activity.

© 2012 Thomson Reuters. No Claim to Orig. US Gov. Works.

(5) “Enactment” means:

(a) a municipal ordinance, for a municipality;

(b) a county ordinance, for a county; and

(c) a governing board resolution, for a local district, special service district, or private entity.

(6) “Encumber” means:

(a) a pledge to retire a debt; or

(b) an allocation to a current purchase order or contract.

(7) “Hookup fee” means a fee for the installation and inspection of any pipe, line, meter, or appurtenance to connect to a gas, water, sewer, storm water, power, or other utility system of a municipality, county, local district, special service district, or private entity.

(8)(a) “Impact fee” means a payment of money imposed upon new development activity as a condition of development approval to mitigate the impact of the new development on public infrastructure.

(b) “Impact fee” does not mean a tax, a special assessment, a building permit fee, a hookup fee, a fee for project improvements, or other reasonable permit or application fee.

(9) “Impact fee analysis” means the written analysis of each impact fee required by Section 11-36a-303.

(10) “Impact fee facilities plan” means the plan required by Section 11-36a-301.

(11)(a) “Local political subdivision” means a county, a municipality, a local district under Title 17B, Limited Purpose Local Government Entities--Local Districts, or a special service district under Title 17D, Chapter 1, Special Service District Act.

(b) “Local political subdivision” does not mean a school district, whose impact fee activity is governed by Section 53A-20-100. 5.

(12) “Private entity” means an entity with private ownership that provides culinary water that is required to be used as a condition of development.

© 2012 Thomson Reuters. No Claim to Orig. US Gov. Works.

(13)(a) “Project improvements” means site improvements and facilities that are:

(i) planned and designed to provide service for development resulting from a development activity;

(ii) necessary for the use and convenience of the occupants or users of development resulting from a development activity; and

(iii) not identified or reimbursed as a system improvement.

(b) “Project improvements” does not mean system improvements.

(14) “Proportionate share” means the cost of public facility improvements that are roughly proportionate and reasonably related to the service demands and needs of any development activity.

(15) “Public facilities” means only the following impact fee facilities that have a life expectancy of 10 or more years and are owned or operated by or on behalf of a local political subdivision or private entity:

(a) water rights and water supply, treatment, and distribution facilities;

(b) wastewater collection and treatment facilities;

(c) storm water, drainage, and flood control facilities;

(d) municipal power facilities;

(e) roadway facilities;

(f) parks, recreation facilities, open space, and trails;

(g) public safety facilities; or

(h) environmental mitigation as provided in Section 11-36a-205.

(16)(a) “Public safety facility” means:

(i) a building constructed or leased to house police, fire, or other public safety entities; or

© 2012 Thomson Reuters. No Claim to Orig. US Gov. Works.

(ii) a fire suppression vehicle costing in excess of $500,000.

(b) “Public safety facility” does not mean a jail, prison, or other place of involuntary incarceration.

(17)(a) “Roadway facilities” means a street or road that has been designated on an officially adopted subdivision plat, roadway plan, or general plan of a political subdivision, together with all necessary appurtenances.

(b) “Roadway facilities” includes associated improvements to a federal or state roadway only when the associated improvements:

(i) are necessitated by the new development; and

(ii) are not funded by the state or federal government.

(c) “Roadway facilities” does not mean federal or state roadways.

(18)(a) “Service area” means a geographic area designated by a local political subdivision on the basis of sound planning or engineering principles in which a defined set of public facilities provides service within the area.

(b) “Service area” may include the entire local political subdivision.

(19) “Specified public agency” means:

(a) the state;

(b) a school district; or

(c) a charter school.

(20)(a) “System improvements” means:

(i) existing public facilities that are:

(A) identified in the impact fee analysis under Section 11-36a-304; and

(B) designed to provide services to service areas within the community at large; and

© 2012 Thomson Reuters. No Claim to Orig. US Gov. Works.

(ii) future public facilities identified in the impact fee analysis under Section 11-36a-304 that are intended to provide services to service areas within the community at large.

(b) “System improvements” does not mean project improvements.

CREDIT(S)

U.C.A. 1953 § 11-36a-102, UT ST § 11-36a-102

Current through 2011 Third Special Session.

(C) 2012 Thomson Reuters. No Claim to Orig. US Gov. Works.

END OF DOCUMENT

West's Utah Code Annotated Currentness
Title 11. Cities, Counties, and Local Taxing Units
Chapter 36A. Impact Fees Act
Part 3. Establishing an Impact Fee

§ 11-36a-301. Impact fee facilities plan

(1) Before imposing an impact fee, each local political subdivision or private entity shall, except as provided in Subsection (3), prepare an impact fee facilities plan to determine the public facilities required to serve development resulting from new development activity.

(2) A municipality or county need not prepare a separate impact fee facilities plan if the general plan required by Section 10-9a-401 or 17-27a-401, respectively, contains the elements required by Section 11-36a-302.

(3)(a) A local political subdivision with a population, or serving a population, of less than 5,000 as of the last federal census need not comply with the impact fee facilities plan requirements of this part, but shall ensure that:

(i) the impact fees that the local political subdivision imposes are based upon a reasonable plan; and

(ii) each applicable notice required by this chapter is given.

(b) Subsection (3)(a) does not apply to a private entity.

CREDIT(S)

U.C.A. 1953 § 11-36a-301, UT ST § 11-36a-301

Current through 2011 Third Special Session.

(C) 2012 Thomson Reuters. No Claim to Orig. US Gov. Works.

END OF DOCUMENT

West's Utah Code Annotated Currentness
Title 11. Cities, Counties, and Local Taxing Units
Chapter 36A. Impact Fees Act
Part 3. Establishing an Impact Fee

§ 11-36a-302. Impact fee facilities plan requirements--Limitations--School district or charter school

(1) An impact fee facilities plan shall identify:

(a) demands placed upon existing public facilities by new development activity; and

(b) the proposed means by which the local political subdivision will meet those demands.

(2) In preparing an impact fee facilities plan, each local political subdivision shall generally consider all revenue sources, including impact fees and anticipated dedication of system improvements, to finance the impacts on system improvements.

(3) A local political subdivision or private entity may only impose impact fees on development activities when the local political subdivision's or private entity's plan for financing system improvements establishes that impact fees are necessary to achieve an equitable allocation to the costs borne in the past and to be borne in the future, in comparison to the benefits already received and yet to be received.

(4)(a) Subject to Subsection (4)(c), the impact fee facilities plan shall include a public facility for which an impact fee may be charged or required for a school district or charter school if the local political subdivision is aware of the planned location of the school district facility or charter school:

(i) through the planning process; or

(ii) after receiving a written request from a school district or charter school that the public facility be included in the impact fee facilities plan.

(b) If necessary, a local political subdivision or private entity shall amend the impact fee facilities plan to reflect a public facility described in Subsection (4)(a).

(c)(i) In accordance with Subsections 10-9a-305(4) and 17-27a-305(4), a local political subdivision may not

© 2012 Thomson Reuters. No Claim to Orig. US Gov. Works.

require a school district or charter school to participate in the cost of any roadway or sidewalk.

(ii) Notwithstanding Subsection (4)(c)(i), if a school district or charter school agrees to build a roadway or sidewalk, the roadway or sidewalk shall be included in the impact fee facilities plan if the local jurisdiction has an impact fee facilities plan for roads and sidewalks.

CREDIT(S)

U.C.A. 1953 § 11-36a-302, UT ST § 11-36a-302

Current through 2011 Third Special Session.

(C) 2012 Thomson Reuters. No Claim to Orig. US Gov. Works.

END OF DOCUMENT

West's Utah Code Annotated Currentness
Title 11. Cities, Counties, and Local Taxing Units
Chapter 36A. Impact Fees Act
Part 3. Establishing an Impact Fee
§ 11-36a-303. Impact fee analysis

(1) Subject to the notice requirements of Section 11-36a-504, each local political subdivision or private entity intending to impose an impact fee shall prepare a written analysis of each impact fee.

(2) Each local political subdivision or private entity that prepares an impact fee analysis under Subsection (1) shall also prepare a summary of the impact fee analysis designed to be understood by a lay person.

CREDIT(S)

U.C.A. 1953 § 11-36a-303, UT ST § 11-36a-303

Current through 2011 Third Special Session.

(C) 2012 Thomson Reuters. No Claim to Orig. US Gov. Works.

END OF DOCUMENT

© 2012 Thomson Reuters. No Claim to Orig. US Gov. Works.

West's Utah Code Annotated Currentness
Title 11. Cities, Counties, and Local Taxing Units
Chapter 36A. Impact Fees Act
Part 3. Establishing an Impact Fee

§ 11-36a-304. Impact fee analysis requirements

(1) An impact fee analysis shall:

(a) identify the anticipated impact on or consumption of any existing capacity of a public facility by the anticipated development activity;

(b) identify the anticipated impact on system improvements required by the anticipated development activity to maintain the established level of service for each public facility;

(c) subject to Subsection (2), demonstrate how the anticipated impacts described in Subsections (1)(a) and (b) are reasonably related to the anticipated development activity;

(d) estimate the proportionate share of:

(i) the costs for existing capacity that will be recouped; and

(ii) the costs of impacts on system improvements that are reasonably related to the new development activity; and

(e) based on the requirements of this chapter, identify how the impact fee was calculated.

(2) In analyzing whether or not the proportionate share of the costs of public facilities are reasonably related to the new development activity, the local political subdivision or private entity, as the case may be, shall identify, if applicable:

(a) the cost of each existing public facility that has excess capacity to serve the anticipated development resulting from the new development activity;

(b) the cost of system improvements for each public facility;

© 2012 Thomson Reuters. No Claim to Orig. US Gov. Works.

(c) other than impact fees, the manner of financing for each public facility, such as user charges, special assessments, bonded indebtedness, general taxes, or federal grants;

(d) the relative extent to which development activity will contribute to financing the excess capacity of and system improvements for each existing public facility, by such means as user charges, special assessments, or payment from the proceeds of general taxes;

(e) the relative extent to which development activity will contribute to the cost of existing public facilities and system improvements in the future;

(f) the extent to which the development activity is entitled to a credit against impact fees because the development activity will dedicate system improvements or public facilities that will offset the demand for system improvements, inside or outside the proposed development;

(g) extraordinary costs, if any, in servicing the newly developed properties; and

(h) the time-price differential inherent in fair comparisons of amounts paid at different times.

CREDIT(S)

U.C.A. 1953 § 11-36a-304, UT ST § 11-36a-304

Current through 2011 Third Special Session.

(C) 2012 Thomson Reuters. No Claim to Orig. US Gov. Works.

END OF DOCUMENT

West's Utah Code Annotated Currentness
Title 11. Cities, Counties, and Local Taxing Units
Chapter 36A. Impact Fees Act
Part 3. Establishing an Impact Fee

§ 11-36a-305. Calculating impact fees

(1) In calculating an impact fee, a local political subdivision or private entity may include:

(a) the construction contract price;

(b) the cost of acquiring land, improvements, materials, and fixtures;

(c) the cost for planning, surveying, and engineering fees for services provided for and directly related to the construction of the system improvements; and

(d) for a political subdivision, debt service charges, if the political subdivision might use impact fees as a revenue stream to pay the principal and interest on bonds, notes, or other obligations issued to finance the costs of the system improvements.

(2) In calculating an impact fee, each local political subdivision or private entity shall base amounts calculated under Subsection (1) on realistic estimates, and the assumptions underlying those estimates shall be disclosed in the impact fee analysis.

CREDIT(S)

U.C.A. 1953 § 11-36a-305, UT ST § 11-36a-305

Current through 2011 Third Special Session.

(C) 2012 Thomson Reuters. No Claim to Orig. US Gov. Works.

END OF DOCUMENT

West's Utah Code Annotated Currentness
Title 11. Cities, Counties, and Local Taxing Units
Chapter 36A. Impact Fees Act
Part 3. Establishing an Impact Fee

§ 11-36a-306. Certification of impact fee analysis

(1) An impact fee facilities plan shall include a written certification from the person or entity that prepares the impact fee facilities plan that states the following:

"I certify that the attached impact fee facilities plan:

1. includes only the costs of public facilities that are:

a. allowed under the Impact Fees Act; and

b. actually incurred; or

c. projected to be incurred or encumbered within six years after the day on which each impact fee is paid;

2. does not include:

a. costs of operation and maintenance of public facilities;

b. costs for qualifying public facilities that will raise the level of service for the facilities, through impact fees, above the level of service that is supported by existing residents;

c. an expense for overhead, unless the expense is calculated pursuant to a methodology that is consistent with generally accepted cost accounting practices and the methodological standards set forth by the federal Office of Management and Budget for federal grant reimbursement; and

3. complies in each and every relevant respect with the Impact Fees Act."

(2) An impact fee analysis shall include a written certification from the person or entity that prepares the impact fee analysis which states as follows:

© 2012 Thomson Reuters. No Claim to Orig. US Gov. Works.

"I certify that the attached impact fee analysis:

1. includes only the costs of public facilities that are:

   a. allowed under the Impact Fees Act; and

   b. actually incurred; or

   c. projected to be incurred or encumbered within six years after the day on which each impact fee is paid;

2. does not include:

   a. costs of operation and maintenance of public facilities;

   b. costs for qualifying public facilities that will raise the level of service for the facilities, through impact fees, above the level of service that is supported by existing residents;

   c. an expense for overhead, unless the expense is calculated pursuant to a methodology that is consistent with generally accepted cost accounting practices and the methodological standards set forth by the federal Office of Management and Budget for federal grant reimbursement;

3. offsets costs with grants or other alternate sources of payment; and

4. complies in each and every relevant respect with the Impact Fees Act."

CREDIT(S)

U.C.A. 1953 § 11-36a-306, UT ST § 11-36a-306

Current through 2011 Third Special Session.

(C) 2012 Thomson Reuters. No Claim to Orig. US Gov. Works.

END OF DOCUMENT

EXHIBITS

EXHIBIT 1

FORECAST OF CUSTOMERS, ENERGY AND DEMANDS, 2016 - 2035

Santa Clara City
2016 Impact Fee Analysis

Forecasted Customers, Energy and Demands
For Years 2016 - 2035

Line No.	Description		Actual 2015	Forecast Period (Fiscal Year) 1 2016	2 2017	3 2018	4 2019	5 2020	6 2021	7 2022	8 2023	9 2024	10 2025
1	System Coincident Peak Demand [1]	kW	14,400	14,900.0	15,425.0	15,965.0	16,524.0	17,102.0	17,615.1	18,143.5	18,687.8	19,248.5	19,825.9
2	Total System Energy (Input to Distribution System) [2]	kWh	38,167,181	39,625,537	41,210,375	42,795,214	44,380,053	45,964,892	47,549,731	49,134,569	50,719,408	52,304,247	53,889,086
3	System Load Factor	%	30.26%	30.00%	30.00%	31.00%	31.00%	31.00%	31.00%	31.00%	31.00%	31.00%	31.00%
	Energy Sales at Meter [3]												
4	Residential	kWh	31,759,398	32,909,059	34,058,721	35,208,382	36,358,044	37,507,705	38,657,367	39,807,028	40,956,690	42,106,351	43,256,013
5	Commercial	kWh	4,378,005	4,733,940	5,089,876	5,445,811	5,801,746	6,157,682	6,513,617	6,869,553	7,225,488	7,581,423	7,937,359
6	Agricultural	kWh	1,260	1,260	1,260	1,260	1,260	1,260	1,260	1,260	1,260	1,260	1,260
7	Total	kWh	36,138,663	37,644,260	39,149,857	40,655,453	42,161,050	43,666,647	45,172,244	46,677,841	48,183,438	49,689,034	51,194,631
8	System Energy Loss Factor [4]	%	5.31%	5.00%	5.00%	5.00%	5.00%	5.00%	5.00%	5.00%	5.00%	5.00%	5.00%
	Number of Customers [5]												
	Average												
9	Residential	#	2,210	2,290	2,370	2,450	2,530	2,610	2,690	2,770	2,850	2,930	3,010
10	Commercial	#	123	133	143	153	163	173	183	193	203	213	223
11	Agricultural	#	10	10	10	10	10	10	10	10	10	10	10
12	Total	#	2,343	2,433	2,523	2,613	2,703	2,793	2,883	2,973	3,063	3,153	3,243
	Average Annual Usage Per Customer [6]												
13	Residential	kWh/Cust.	14,370.8	14,370.8	14,370.8	14,370.8	14,370.8	14,370.8	14,370.8	14,370.8	14,370.8	14,370.8	14,370.8
14	Commercial	kWh/Cust.	35,593.5	35,593.5	35,593.5	35,593.5	35,593.5	35,593.5	35,593.5	35,593.5	35,593.5	35,593.5	35,593.5
15	Agricultural	kWh/Cust.	126.0	126.0	126.0	126.0	126.0	126.0	126.0	126.0	126.0	126.0	126.0
	Coincident Peak Demand Allocation [7]												
16	Residential	kW	12,915.9	13,304.7	13,716.4	14,141.8	14,584.2	15,043.5	15,445.8	15,862.0	16,292.2	16,736.8	17,196.0
17	Commercial	kW	1,483.7	1,594.9	1,708.2	1,822.8	1,939.4	2,058.1	2,168.8	2,281.1	2,395.2	2,511.3	2,629.5
18	Agricultural	kW	0.4	0.4	0.4	0.4	0.4	0.4	0.4	0.4	0.4	0.4	0.4
19	Total	kW	14,400.0	14,900.0	15,425.0	15,965.0	16,524.0	17,102.0	17,615.1	18,143.5	18,687.8	19,248.5	19,825.9
								2,702					
	Average CP Demand Per Customer												
20	Residential	kW	5.8	5.8	5.8	5.8	5.8	5.8	5.7	5.7	5.7	5.7	5.7
21	Commercial	kW	12.1	12.0	11.9	11.9	11.9	11.9	11.9	11.8	11.8	11.8	11.8
22	Agricultural	kW	0.0	0.0	0.0	0.0	0.0	0.0	0.0	0.0	0.0	0.0	0.0
23	Total	kW	6.1	6.1	6.1	6.1	6.1	6.1	6.1	6.1	6.1	6.1	6.1
	Estimated NCP Demand at Meter [8]												
24	Residential	kW	14,502.0	15,027.0	15,551.9	16,076.9	16,601.8	17,126.8	17,651.8	18,176.7	18,701.7	19,226.6	19,751.6
25	Commercial	kW	1,665.9	1,801.3	1,936.8	2,072.2	2,207.7	2,343.1	2,478.5	2,614.0	2,749.4	2,884.9	3,020.3
26	Agricultural	kW	0.5	0.5	0.5	0.5	0.5	0.5	0.5	0.5	0.5	0.5	0.5
27	Total	kW	16,168.4	16,828.8	17,489.2	18,149.6	18,810.0	19,470.4	20,130.8	20,791.2	21,451.6	22,112.0	22,772.4
28	System Coincidence Factor [9]	%	84.3%	84.1%	83.8%	83.6%	83.5%	83.4%	83.1%	82.9%	82.8%	82.7%	82.7%

Santa Clara City
2016 Impact Fee Analysis

Forecasted Customers, Energy and Demands
For Years 2016 - 2035

Line No.	Description		Actual 2015	Forecast Period (Fiscal Year) 1 2016	2 2017	3 2018	4 2019	5 2020	6 2021	7 2022	8 2023	9 2024	10 2025
	Average NCP Per Customer												
29	Residential	kW/Cust.	6.6	6.6	6.6	6.6	6.6	6.6	6.6	6.6	6.6	6.6	6.6
30	Commercial	kW/Cust.	13.5	13.5	13.5	13.5	13.5	13.5	13.5	13.5	13.5	13.5	13.5
31	Agricultural	kW/Cust.	0.0	0.0	0.0	0.0	0.0	0.0	0.0	0.0	0.0	0.0	0.0
32	Total	kW/Cust.	6.9	6.9	6.9	6.9	7.0	7.0	7.0	7.0	7.0	7.0	7.0
	Avg. Number of Customers Added Per Year [10]												
33	Residential			80	80	80	80	80	80	80	80	80	80
34	Commercial			10	10	10	10	10	10	10	10	10	10
35	Agricultural			-	-	-	-	-	-	-	-	-	-
	Estimated Increase in Average Usage Per Customer [11]												
36	Residential			0.00%	0.00%	0.00%	0.00%	0.00%	0.00%	0.00%	0.00%	0.00%	0.00%
37	Commercial			0.00%	0.00%	0.00%	0.00%	0.00%	0.00%	0.00%	0.00%	0.00%	0.00%
38	Agricultural			0.00%	0.00%	0.00%	0.00%	0.00%	0.00%	0.00%	0.00%	0.00%	0.00%
	Estimated Class NCP Load Factor [12]												
39	Residential		25.00%	25.00%	25.00%	25.00%	25.00%	25.00%	25.00%	25.00%	25.00%	25.00%	25.00%
40	Commercial		30.00%	30.00%	30.00%	30.00%	30.00%	30.00%	30.00%	30.00%	30.00%	30.00%	30.00%
41	Agricultural		30.00%	30.00%	30.00%	30.00%	30.00%	30.00%	30.00%	30.00%	30.00%	30.00%	30.00%

Footnotes shown on page 5.

Santa Clara City
2016 Impact Fee Analysis

Forecasted Customers, Energy and Demands
For Years 2016 - 2035

Line No.	Description		Forecast Period 11 2026	12 2027	13 2028	14 2029	15 2030	16 2031	17 2032	18 2033	19 2034	20 2035	Annual Growth Rate
1	System Coincident Peak Demand [1]	kW	20,321.6	20,829.6	21,350.3	21,884.1	22,431.2	22,992.0	23,566.8	24,155.9	24,759.8	25,378.8	2.84%
2	Total System Energy (Input to Distribution System) [2]	kWh	55,473,924	57,058,763	58,643,602	60,228,441	61,813,279	63,398,118	64,982,957	66,567,796	68,152,635	69,737,473	3.02%
3	System Load Factor	%	31.00%	31.00%	31.00%	31.00%	31.00%	31.00%	31.00%	31.00%	31.00%	31.00%	
	Energy Sales at Meter [3]												
4	Residential	kWh	44,405,674	45,555,336	46,704,997	47,854,659	49,004,320	50,153,981	51,303,643	52,453,304	53,602,966	54,752,627	2.72%
5	Commercial	kWh	8,293,294	8,649,229	9,005,165	9,361,100	9,717,035	10,072,971	10,428,906	10,784,842	11,140,777	11,496,712	4.78%
6	Agricultural	kWh	1,260	1,260	1,260	1,260	1,260	1,260	1,260	1,260	1,260	1,260	0.00%
7	Total	kWh	52,700,228	54,205,825	55,711,422	57,217,019	58,722,615	60,228,212	61,733,809	63,239,406	64,745,003	66,250,600	3.02%
8	System Energy Loss Factor [4]	%	5.00%	5.00%	5.00%	5.00%	5.00%	5.00%	5.00%	5.00%	5.00%	5.00%	
	Number of Customers [5]												
	Average												
9	Residential	#	3,090	3,170	3,250	3,330	3,410	3,490	3,570	3,650	3,730	3,810	2.72%
10	Commercial	#	233	243	253	263	273	283	293	303	313	323	4.78%
11	Agricultural	#	10	10	10	10	10	10	10	10	10	10	0.00%
12	Total	#	3,333	3,423	3,513	3,603	3,693	3,783	3,873	3,963	4,053	4,143	2.84%
	Average Annual Usage Per Customer [6]												
13	Residential	kWh/Cust.	14,370.8	14,370.8	14,370.8	14,370.8	14,370.8	14,370.8	14,370.8	14,370.8	14,370.8	14,370.8	0.00%
14	Commercial	kWh/Cust.	35,593.5	35,593.5	35,593.5	35,593.5	35,593.5	35,593.5	35,593.5	35,593.5	35,593.5	35,593.5	0.00%
15	Agricultural	kWh/Cust.	126.0	126.0	126.0	126.0	126.0	126.0	126.0	126.0	126.0	126.0	0.00%
	Coincident Peak Demand Allocation [7]												
16	Residential	kW	17,584.4	17,983.8	18,394.4	18,816.4	19,249.9	19,695.2	20,152.5	20,622.1	21,104.2	21,599.0	2.58%
17	Commercial	kW	2,736.7	2,845.4	2,955.5	3,067.3	3,180.9	3,296.3	3,413.8	3,533.4	3,655.2	3,779.4	4.65%
18	Agricultural	kW	0.4	0.4	0.4	0.4	0.4	0.4	0.4	0.4	0.4	0.4	0.00%
19	Total	kW	20,321.6	20,829.6	21,350.3	21,884.1	22,431.2	22,992.0	23,566.8	24,155.9	24,759.8	25,378.8	2.84%
	Average CP Demand Per Customer												
20	Residential	kW	5.7	5.7	5.7	5.7	5.6	5.6	5.6	5.6	5.7	5.7	
21	Commercial	kW	11.7	11.7	11.7	11.7	11.7	11.6	11.7	11.7	11.7	11.7	
22	Agricultural	kW	0.0	0.0	0.0	0.0	0.0	0.0	0.0	0.0	0.0	0.0	
23	Total	kW	6.1	6.1	6.1	6.1	6.1	6.1	6.1	6.1	6.1	6.1	
	Estimated NCP Demand at Meter [8]												
24	Residential	kW	20,276.6	20,801.5	21,326.5	21,851.4	22,376.4	22,901.4	23,426.3	23,951.3	24,476.2	25,001.2	2.72%
25	Commercial	kW	3,155.7	3,291.2	3,426.6	3,562.1	3,697.5	3,832.9	3,968.4	4,103.8	4,239.3	4,374.7	4.78%
26	Agricultural	kW	0.5	0.5	0.5	0.5	0.5	0.5	0.5	0.5	0.5	0.5	0.00%
27	Total	kW	23,432.8	24,093.2	24,753.6	25,414.0	26,074.4	26,734.8	27,395.2	28,055.6	28,716.0	29,376.4	2.98%
28	System Coincidence Factor [9]	%	82.4%	82.1%	81.9%	81.8%	81.7%	81.7%	81.7%	81.8%	81.9%	82.1%	82.6%

Santa Clara City
2016 Impact Fee Analysis

Forecasted Customers, Energy and Demands
For Years 2016 - 2035

Line No.	Description		Forecast Period 11 2026	12 2027	13 2028	14 2029	15 2030	16 2031	17 2032	18 2033	19 2034	20 2035	Annual Growth Rate
	Average NCP Per Customer												
29	Residential	kW/Cust.	6.6	6.6	6.6	6.6	6.6	6.6	6.6	6.6	6.6	6.6	0.00%
30	Commercial	kW/Cust.	13.5	13.5	13.5	13.5	13.5	13.5	13.5	13.5	13.5	13.5	0.00%
31	Agricultural	kW/Cust.	0.0	0.0	0.0	0.0	0.0	0.0	0.0	0.0	0.0	0.0	0.00%
32	Total	kW/Cust.	7.0	7.0	7.0	7.1	7.1	7.1	7.1	7.1	7.1	7.1	0.13%
	Avg. Number of Customers Added Per Year [10]												
33	Residential		80	80	80	80	80	80	80	80	80	80	
34	Commercial		10	10	10	10	10	10	10	10	10	10	
35	Agricultural		-	-	-	-	-	-	-	-	-	-	
	Estimated Increase in Average Usage Per Customer [11]												
36	Residential		0.00%	0.00%	0.00%	0.00%	0.00%	0.00%	0.00%	0.00%	0.00%	0.00%	
37	Commercial		0.00%	0.00%	0.00%	0.00%	0.00%	0.00%	0.00%	0.00%	0.00%	0.00%	
38	Agricultural		0.00%	0.00%	0.00%	0.00%	0.00%	0.00%	0.00%	0.00%	0.00%	0.00%	
	Estimated Class NCP Load Factor [12]												
39	Residential		25.00%	25.00%	25.00%	25.00%	25.00%	25.00%	25.00%	25.00%	25.00%	25.00%	
40	Commercial		30.00%	30.00%	30.00%	30.00%	30.00%	30.00%	30.00%	30.00%	30.00%	30.00%	
41	Agricultural		30.00%	30.00%	30.00%	30.00%	30.00%	30.00%	30.00%	30.00%	30.00%	30.00%	

Footnotes shown on page 5.

Santa Clara City
2016 Impact Fee Analysis

Forecasted Customers, Energy and Demands
For Years 2016 - 2035

---

[1] 2016 - 2020 per the Capital Facilities Plan. 2021 - 2025 assumes a growth rate of 3.0% and 2026 - 2035 assumes a growth rate of 2.5%.
[2] Calculated based on Total Sales at Meter (line 7) and the assumed System Loss Factor (line 8).
[3] Calculated based on average number of customers and usage per customer.
[4] Based on the actual loss factor for 2015 rounded to the nearest whole percent.
[5] Equals prior year number plus current year additions (lines 33 - 35).
[6] Based on historical average plus assumed growth in usage (lines 36-38).
[7] Allocated to various customer classes based on NCP calculations (lines 24 - 26).
[8] Annual NCP Demand based on kWh sales at meter, assumed NCP load factor and indicated loss factor.
[9] Line 1 / Line 27 after adjustment for losses.
[10] Estimated number of customers added per year.
[11] Assumes there will be no increase in average usage per customer.
[12] Residential load factor is estimated; commerical load factor is based on an analysis of data provided by the City.

EXHIBIT 2

IMPACT FEE PROJECTS / COSTS

Santa Clara City
Impact Fee Analysis

Current and Future Impact Fee Projects / Costs

Line No.	Description of System Improvements	Estimated Total Project Costs Current $ [1]	Estimated Total Project Costs Future $ [2]	Portion Related to New Development	Total Impact Fee Eligible Costs
		(a)	(b)	(c)	(d)
	Projects Directly Funded Through Impact Fees				
	2016				
1	Install second 10/12/14 MVA substation transformer, 69 kV breaker, regulators with two additional circuits in the Paul Grimshaw Substation. [3]	$ 560,000	$ 560,000	0.00%	$ -
2	Sub-total 2016	560,000	560,000		-
	2017				
3	750 URD circuit #4 from Paul Grimshaw substation to Rachel, w/ two PME switchgear.	240,000	246,000	100.00%	246,000
4	Overcurrent Protection Coordination Review	30,000	30,750	100.00%	30,750
5	Sub-total 2017	270,000	276,750		276,750
	2019				
6	Extend 69 kV transmission, with 15kV underbuild to South Hills development area (0.75 milles) and interrconnect underbuild to URD circuit	265,000	285,376	100.00%	285,376
7	750 URD circuit - Hamblin to Rachel along North Town, w/ two PME switchgear.	218,000	234,762	100.00%	234,762
8	750 URD circuit - Claude to Arrowhead, w/ three PME switchgear.	377,000	405,988	100.00%	405,988
9	Sub-total 2019	860,000	926,126		926,126
	2020				
10	Capacitor bank(s) installation.	35,000	38,633	100.00%	38,633
11	**Total Directly Funded Projects**	1,725,000	1,801,509		1,241,509
	Projects Funded Through Bond Financings				
	2020				
12	One 2 MW generator.	2,500,000	2,759,532	100.00%	2,759,532
13	**Total Current and Future Projects**	4,225,000	4,561,042		4,001,042

[1] Per the City's Capital Facilities Plan, August 2015.
[2] Column (a) amounts inflated to year of construction at an est. annual rate of --> 2.50%
[3] Project completed as of the finalization of the IFA.

EXHIBIT 3

IMPACT FEE DEMAND ANALYSIS

Santa Clara City
Impact Fee Analysis

Impact Fee Demand Analysis

Line No.	Description		5-Year Recovery Period				20-Year Recovery Period			
			Residential	Commercial [2]	Agricultural	Total System	Residential	Commercial [2]	Agricultural	Total System
			(a)	(b)	(c)	(d)	(a)	(b)	(c)	(d)
	Calculation of Demand Placed on Existing System [1]									
1	CP Demand - Last Year of Recovery Period	kW	15,043.5	2,058.1	0.4	17,102.0	21,599.0	3,779.4	0.4	25,378.8
2	CP Demand - 2015 Acutal	kW	12,915.9	1,483.7	0.4	14,400.0	12,915.9	1,483.7	0.4	14,400.0
3	Increase in CP Demand at System Input	kW	2,127.6	574.4	0.0	2,702.0	8,683.1	2,295.7	0.0	10,978.8
4	Average System Loss Factor	%	5.0%	5.0%	5.0%	5.0%	5.0%	5.0%	5.0%	5.0%
5	Estimated Increase in CP Demand at Meter	kW	2,021.2	545.7	0.0	2,566.9	8,249.0	2,180.9	0.0	10,429.9
6	NCP Demand - Last Year of Recovery Period at Meter [1]	kW	17,126.8	2,343.1	0.5	19,470.4	25,001.2	4,374.70	0.5	29,376.4
7	Estimated NCP Demand - 2015 at Meter [1]		14,502.0	1,665.9	0.5	16,168.4	14,502.0	1,665.9	0.5	16,168.4
8	Estimated Increase in NCP Demand at Meter	kW	2,624.8	677.2	-	3,302.0	10,499.2	2,708.8	-	13,208.0
	Increase in Average Number of Customers [1]									
9	Avg. Number of Customers - Last Year of Recovery Period	#	2,610	173	10	2,793	3,810	323	10	4,143
10	Avg. Number of Customers - 2015 Actual	#	2,210	123	10	2,343	2,210	123	10	2,343
11	Increase in Average Number of Customers	#	400	50	-	450	1,600	200	-	1,800
12	Average Increase in CP Demand per Customer Added	kW	5.1	10.9	N/A	5.7	5.2	10.9	N/A	5.8
13	Average Increase in NCP Demand per Customer Added	kW	6.6	13.5	N/A	7.3	6.6	13.5	N/A	7.3
14	Average System Coincidence Factor for Added Load [1]		0.77	0.81	N/A	0.78	0.79	0.81	N/A	0.79

[1] Per the Impact Fee Forecast of Customers, Energy and Demands, 2016 - 2035.
[2] Commercial represents everthing non-residential (e.g., churches, schools, etc.) except Agricultural.

EXHIBIT 4

IMPACT FEE COST ANALYSIS

Santa Clara City
2016 Electric Impact Fee Study

Impact Fee Cost Analysis

Line No.	Description		5-year Recovery Period 2016-2020	20-Year Recovery Period 2016-2035	Totals
			(a)	(b)	(c)
	Curent and Future Projects				
1	Direct Recovery Projects [1]	$	1,241,509		1,241,509
2	Bonded Projects [1]	$		2,759,532	2,759,532
3	Add: Project Financing Costs [2]	$		1,610,426	1,610,426
4	Sub-Total Current and Future Projects	$	1,241,509	4,369,958	5,611,468
5	**Add: Unrecovered Historical Growth-related Projects [3]**	$		205,290	205,290
6	**Less: Balance of Unused Impact Fee Funds [4]**	$	450,000		450,000
7	**Net Project Costs to be Recovered Through Impact Fees**	$	791,509	4,575,248	5,366,758
	Assumed Impact Fee Recovery Levels				
8	100%	$	791,509	4,575,248	5,366,758
9	75%	$	593,632	3,431,436	4,025,068
10	50%	$	395,755	2,287,624	2,683,379
	Increase in NCP Demand at Meter [5]				
11	Residential	kW	2,624.8	10,499.2	
12	Commecial	kW	677.2	2,708.8	
13	Total	kW	3,302.0	13,208.0	
	Base Impact Fee at Various Recovery Levels				
14	100%	$/kW	239.71	346.40	586.11
15	75%	$/kW	179.78	259.80	439.58
16	50%	$/kW	119.85	173.20	293.05

[1] Based on City's Capital Improvement Plan, August 2015, see Exhibit 2.
[2] Bonded Projects (i.e., new generation project) assumed to be financed with 20-year bond issue -- see attached analyses.
[3] Based on information provided by the City. Represents costs associated with the City's new City Hall and Administration building.
[4] Based on the City's 2015 Impact Fee Audit report filed with the Utah State Auditor.
[5] See Exhhibit 3 - Impact Fee Demand Analysis.

Santa Clara City
2016 Electric Impact Fee Analysis

Impact Fee Projects / Costs
Estimated Debt Service Requirements

		100% Recovery
1	Total Project Costs (Impact Fee Portion)	$ 2,759,532
2	Add: Debt Issuance Costs (3.0%)	82,786
3	Total Debt Issue	2,842,318
4	Recovery Level	100%
5	Total Principal Recovery	$ 2,842,318
6	Principal	$ 2,842,000
7	Term	20
8	Interest Rate	4.50%

			1	2	3	4	5	6	7	8	9	10
	Debt Service - Years 1-10											
9	Interest Payment	$ 1,071,607	$ 127,890	$ 123,813	$ 119,553	$ 115,101	$ 110,449	$ 105,588	$ 100,508	$ 95,199	$ 89,651	$ 83,854
10	Principal Payment	1,113,213	90,592	94,669	98,929	103,381	108,033	112,894	117,974	123,283	128,831	134,628
11	Total	$ 2,184,820	$ 218,482	$ 218,482	$ 218,482	$ 218,482	$ 218,482	$ 218,482	$ 218,482	$ 218,482	$ 218,482	$ 218,482

			11	12	13	14	15	16	17	18	19	20
	Debt Service - Years 11-20											
12	Interest Payment	$ 456,034	$ 77,795	$ 71,464	$ 64,849	$ 57,935	$ 50,711	$ 43,161	$ 35,271	$ 27,027	$ 18,411	$ 9,408
13	Principal Payment	1,728,787	140,687	147,018	153,633	160,547	167,771	175,321	183,211	191,455	200,071	209,074
14	Total	$ 2,184,820	$ 218,482	$ 218,482	$ 218,482	$ 218,482	$ 218,482	$ 218,482	$ 218,482	$ 218,482	$ 218,482	$ 218,482

			21	22	23	24	25
	Debt Service - Years 21-25						
15	Interest Payment	$ -	$ -	$ -	$ -	$ -	$ -
16	Principal Payment	-	-	-	-	-	-
17	Total	$ -	$ -	$ -	$ -	$ -	$ -

	Total Debt Service	
18	Interest Payment	$ 1,527,640
19	Principal Payment	2,842,000
20	Total	$ 4,369,640

EXHIBIT 5

CURRENT AND PROPOSED IMPACT FEES

Santa Clara City
Impact Fee Analysis

Summary of Charges For Residential & Commercial Customers
Current and Proposed Impact Fees

Line No.	Description / Panel Rating	Current Impact Fee	Proposed Impact Fee at Various Recovery Levels		
			100%	75%	50%
		(a)	(b)	(c)	(d)
1	***Base Impact Fee ($ per kW)***	*$ 773.00*	*$ 586.11*	*$ 439.58*	*$ 293.05*
	Assumed Panel Utilization				
2	Residential		*15.0%*	*15.0%*	*15.0%*
3	Commercial		*17.5%*	*17.5%*	*17.5%*
	Assumed Power Factor				
4	Residential		*90%*	*90%*	*90%*
5	Commercial		*85%*	*85%*	*85%*
	Impact Fee Charge for Applicable Panel Size				
	Residential (120/240, 1 phase)				
6	200 Amp	4,739	3,798	2,848	1,899
7	400 Amp	5,529	7,596	5,697	3,798
8	600 Amp		11,394	8,545	5,697
9	800 Amp		15,192	11,394	7,596
	Commercial (120/240, 1 phase)				
10	200 Amp	3,339	4,185	3,139	2,092
11	400 Amp	6,679	8,370	6,277	4,185
12	600 Amp	10,018	12,554	9,416	6,277
	Commercial (120/208, 3 phase)				
13	200 Amp	5,013	6,282	4,711	3,141
14	400 Amp	10,025	12,563	9,422	6,282
15	600 Amp	15,038	18,845	14,134	9,422
	Commercial (277/480, 3 phase)				
16	200 Amp	11,568	14,496	10,872	7,248
17	400 Amp	23,123	28,992	21,744	14,496
18	800 Amp	46,270	57,985	43,488	28,992
19	1200 Amp	69,405	86,977	65,233	43,488