SANTA CLARA CITY

BUILDING PERMIT APPLICATION

BECOMES PERMIT WHEN SIGNED

Founded 1854 Santa Clara Utah

Building Dept: 435-656-4690
Inspections: 435-879-5313
Fax: 435-879-5298

❒ Owner/Builder ❒ Contractor	Date of Application:	Date Issued:	**Permit No.** SAC

BUILDING FEE SCHEDULE

⮟ TYPE OF IMPROVEMENT / KIND OF CONSTRUCTION ⮟			
❒ New Home	❒ Addition	❒ Pool	❒ Tenant Finish
❒ Remodel	❒ Garage	❒ Ret. Wall	❒ Other
Building Address:			
Property Tax ID#:			
Lot #:	Plat or Subdivision:		
Owner of Property:		Phone:	
Owner Mailing Address:		City/Zip:	
Business Name & Address:		Lic. No.:	
Architect or Engineer:			
General Contractor:		State Lic. No.:	
General Email:			
General Address:		Phone:	
General City:	State:	Zip:	
Electrical Contractor:		State Lic. No.:	
Electrical Address:		Phone:	
Electrical City:	State:	Zip:	
Plumbing Contractor:		State Lic. No.:	
Plumbing Address:		Phone	
Plumbing City:	State:	Zip:	
Mechanical Contractor:		State Lic. No.:	
Mechanical Address:		Phone	
Mechanical City:	State:	Zip:	

⮟ Building Square Footage ⮟		**Valuation:**		
❒ Main Floor:		Building Fees	$	
❒ 2nd Story:		Plan Review Fees	$	
❒ Fin. Basement:		Water Connect	$	
❒ Garage:		Water Impact	$	
❒ Addition:		Sewer Impact - City	$	
❒ Other:		Sewer Impact – County	$	
Type of Construction	Occupancy Group	Electrical Connect	$	
		Electrical Impact 200 amp	$	
		Electrical Impact 400 amp	$	
Bedrooms:		Street Impact	$	
Bathrooms:		Parks/Trails Impact	$	
Garages:		Public Safety Impact	$	
Type of Construction Material		Storm Water Impact	$	
❒ Brick ❒ Frame ❒Brick Var.		Storm Water Inspections	$	
❒ Steel ❒ Block ❒ Concrete		Maintenance Deposit	$	
Max. Occ. Load:		State Fee (1%)	$	
Fire Sprinkler: ❒ Yes ❒ No		Environmental Mitigation Fee (1%) – City	$	
Plan Check OK By:		Environmental Mitigation Fee (2%) – County	$	
		➢➢ **TOTAL**	$	

Signature of Building Official:	Date:
Comments:	

- CITY USE ONLY -

Plot Plan Setbacks in Feet		Approved Date:
Front	Side	/ /
Rear	Side	

Special Approvals	Required	Received	Approved
Health Department			
Public Safety			
Geotechnical Rep.			
Electrical Department			
Built to IRC/IBC			

Additional Notes:

NOTE: 24 hours' notice is required for all inspections.

This permit becomes null and void if work or construction authorized is not commenced within 180 days, or if construction or work is suspended or abandoned for a period of 180 days at any time after work is commenced. I here-by certify that I have read and examined this application and know the same to be true and correct. All provisions of laws and ordinances governing this type of work will be compiled with whether specified herein or not the granting of a permit does not presume to give authority to violate or cancel the provisions of any other state or local law regulating construction or the performance of construction and that I make this statement under penalty of perjury. Maintenance Deposit is refundable after final inspection if: 1) site is kept clean 2) building is NOT occupied prior to final inspection and issuance of Certificate of Occupancy.

Signature of Contractor or Authorized Agent:	Date:
Signature of Owner:	Date:
Print Name:	Date:

PERMIT APPLICATION REQUIREMENTS FOR:

SINGLE-FAMILY RESIDENCE

To obtain a permit for a single-family residence, please fill out a ***building permit application***, ***two (2) sets of drawings*** and ***engineering/calculations with CD*** submitted after correction to plan review of the following (inked, photo copied or blueprinted):

1) PRE-FOUNDATION (Pre-Pad) COMPLIANCE LETTER, lot specific, from a geotechnical engineering firm with engineering stamp and signature. **NOT the Soils Report**. BUILDING PLANS WILL NOT BE REVIEWED WITHOUT THIS DOCUMENT!

2) WET STAMPED ENGINEERED DRAWINGS/DETAILS (lot specific) for:

A) Foundation Systems other than conventional slab on grade;
B) Venting Systems for pier homes
C) SHEAR WALLS for Non-Conventional Construction homes over 1,800 sq ft.

3) CONSTRUCTION PLANS TO INCLUDE THE FOLLOWING:

A) Plot/Site Plan - Minimum Setback Requirements: Front - 25', Sides - 8' & 12', Rear - 10'

1) Location of all property lines and names of streets adjoining property
2) Lot size and a North arrow;
3) Location and footprint of proposed building and distances (setbacks) to the property lines;
4) Location of known utilities and/or other easements, water courses, washes or ditches, or if the property is located in a flood plain
5) Finished Floor Elevations and Property line Elevations
6) NOI (Notice of Intent – Storm Water)
7) Landscape Plan and Revegitation Plan

B) Front, Rear, Left Side, Right Side Elevations -

1) Exterior covering (stucco, siding, brick, etc.)
2) Roof pitch
3) Roof covering (concrete tile, asphalt shingles, etc.)
4) Attic Ventilation calculation
5) Overall height of building and stories

C) Foundation Plan -

1) Footings (exterior, interior, spot)
2) Slabs (patio, porch) and stem walls, basement walls
3) Thickness of slab, slope of garage floor, etc.
4) Location of all holddowns
5) SHEAR WALL DESIGN (anchors, straps, holddowns, etc.)

D) Floor Plan -

1) All rooms and dimensions
2) Window location and sizes
3) Door & window headers and beam sizes
4) Location of plumbing fixtures
5) Furnace & water heater locations
6) Attic or under floor access location
7) Designate total square footage of house and total square footage of garage

E) Electrical Plan -

1) Location of all electric outlets, switches, lights, GFCI outlets, smoke detectors, and arch fault outlets
2) Service Panel Location & UFER ground
3) HVAC Load Calculation & Design Plan

F) Floor Framing Plan-

1) Location and sizes of beams
2) Joist spacing

G) Roof Framing Plan-

1) Location and sizes of rafters, trusses, girders, etc.
2) Truss calculations with wet seal and signature provided at plan review
3) Trust layout sheet at plan submittal

H) General Information Sheet – including:

1) Wall cross sections (typical single story, 2-story, basement), size and spacing of studs, size of sill plates and type of wood (redwood, pressure treated), size and spacing of anchor bolts, thickness of roof sheathing, truss blocking, etc.
2) Insulation (type and R factor or Res-check)
3) General Notes for:
    a) Plumbing
    b) Mechanical
    c) Electrical
    d) Floor Plan
    e) Wall Sections
    f) Elevations
    g) Foundation Plan
    h) Footings
    i) SHEAR PANEL DETAILS (with equivalent staples table) & LEGEND

4) SOME BUILDINGS MAY REQUIRE STRUCTURAL ENGINEERING & CALCS SUPPLIED BY AN ENGINEER

A) All homes in flood plain will need an Elevation Certificate

My signature below indicates that I have carefully reviewed the plans and verified that all of the items above have been included. I have checked each item or indicated N/A for items that do not apply and have insured the plans and SUBMITTAL are complete.

Prior to receiving a C/O you must produce copies of

1. Letter of compliance from a Geotechnical Firm for retaining and/or stacked Rock Walls (if applicable)
2. Backflow Prevention Form
3. Builders Insulation Certificate
4. Stucco Installation Certificate
5. Energy Compliance Sheet as per 2006 IRC posted in home
6. Appliance Adjustment Verification Form

If you need assistance from a building inspector, please make an appointment so we can spend some time with you to answer questions.

.

RESIDENTIAL PLAN REVIEW CHECKLIST

Santa Clara City
2603 Santa Clara Drive
Santa Clara, Utah 84765
(435) 656-4690 Fax (435) 879-5298

Contractor: _____

Plans: ❒ Approved ❒ Disapproved

Subdivision: _____

Date: _____

Encroachment: ❒ **Approved** ❒ **Disapproved**

Comments: _____

		Pass	Fail	Applicable		Comments
				Yes	No	
1	Permit Application			❒	❒	
2	Site Plan			❒	❒	
3	Res Check			❒	❒	
4	Soils			❒	❒	
5	NOI			❒	❒	
6	Release of Liability			❒	❒	
7	Const. Site Maint. Agreement			❒	❒	
8	WCWCD			❒	❒	
9	Engineering			❒	❒	
10	Truss Layout			❒	❒	
11	Interior/Exterior Sheer			❒	❒	
12	Footing / Foundation Plan			❒	❒	
13	Hold Downs / FTG Plan			❒	❒	
14	Smoke Detectors/C02			❒	❒	
15	GFI Outlets			❒	❒	
16	ARC Fault Circuits			❒	❒	
17	Subpanel			❒	❒	
18	Outlet Position			❒	❒	
19	Fire Door			❒	❒	
20	5/8 Type X			❒	❒	
21	Gas Meter			❒	❒	
22	Thermal Expansion			❒	❒	
23	Seismic Restraint			❒	❒	
24	Combustion Air			❒	❒	
25	Tempered Windows			❒	❒	
26	Egress Windows			❒	❒	
27	Protection Post			❒	❒	
28	Jacuzzi Access			❒	❒	
29	Attic Access			❒	❒	
30	Set Backs			❒	❒	
31	Wall Height/Building Height			❒	❒	
32	IRC Reference			❒	❒	
33	Attic Ventilation			❒	❒	
34	Penetrations			❒	❒	

		Pass	Fail	Applicable		Comments
				Yes	No	
35	HVAC / FAU/Calculations			❒	❒	
36	18” Platform			❒	❒	
37	Electrical Plan			❒	❒	
38	Rock Wall			❒	❒	
39	J-Metal Weep Screed (show stucco detail)			❒	❒	
40	Landscape Design					

	Requirements	Pass	Fail
41	Drawn to scale with scale indicted (minimum 18" x 24" paper)	❒	❒
42	North arrow	❒	❒
43	Size, location, and width of any easements or right of ways	❒	❒
44	Property line defined and labeled	❒	❒
45	Names and locations of ALL Adjacent streets (including private streets)	❒	❒
46	Location of proposed and existing structures or additions	❒	❒
47	Setback dimensions front, rear and all sides	❒	❒
48	Outside building dimensions and distances between buildings on	❒	❒
49	Driveway, exterior stairs, landings, patios, and decks & HVAC loc.	❒	❒
50	Relative ELEVATIONS of top of finished floor and lot corners, street grades/finished grades	❒	❒
51	Proximity of building to any slopes greater than 2 horizontal to 1 vertical showing steepness and height of slope (cross section of contour showing property line)	❒	❒
52	Location, type, and elevation, of any retaining walls (including rock walls)	❒	❒
53	Show drainage plan	❒	❒
54	FOR PUD - provide building footprint on plot plan	❒	❒
55	Include special notes from recorded plat	❒	❒
56	Identify lot pins - pins in place for inspection	❒	❒
57	If corner lot, indicated which way house faces	❒	❒
58	Indicate main entry way/front door	❒	❒
59	Indicate water, power, and gas meter locations	❒	❒

	Yes	No	Applicable		Comments
			Yes	No	
* Received CD	❒	❒	❒	❒	
* Plans to be RED LINED	❒	❒			
* Plans to be RE-DRAWN	❒	❒			
* Reviewed by Health Dept.	❒	❒			

DEPARTMENT OF COMMERCE
Division of Occupational
& Professional Licensing
160 E 300 S, Fourth Floor
P O Box 146741
Salt Lake City UT 84114-6741
(801) 530-6628

OWNER/BUILDER CERTIFICATION and AGREEMENT TO COMPLY WITH THE CONSTRUCTION TRADES LICENSING ACT

Fax a copy of this Form and Permit to (801) 530-6301 attn: Jody

Name of Owner/Builder:_____

Address:_____

City, State, Zip:_____

LOCATION OF CONSTRUCTION SITE

Address:_____

City, State, Zip:_____

Subdivision Name:_____ Lot #_____

CERTIFICATION

I, _____, certify under penalty of perjury that the following statements are true and correct and are based upon my understanding of the Utah Construction Trades Licensing Act:

1. I am the sole owner of the property and construction project at the above described location; the project described is the only residential structure I have built this year; I have not built more than three residential structures in the past five years.

2. The improvements being placed on the property are intended to be used and will be used for my personal, non-commercial, non-public use.

3. I understand that work performed on the project must be performed by the following:

   a. myself as the sole property owner; or
   b. a licensed contractor; or
   c. my employee(s) for whom I have worker's compensation insurance coverage, for whom I withhold and pay all required payroll taxes, and with respect to whom I comply with all other applicable employee/employer laws; or
   d. any other person working under my supervision as owner/builder to whom no compensation or only token compensation is paid; and

4. I understand that if I retain the services of an unlicensed contractor or compensate an unlicensed person, other than token compensation, or other than as an employee for wages, to perform construction services for which licensure is required, I may be guilty of a Class A Misdemeanor and may be additionally subject to an Administrative fine in the maximum of $2,000 for each day I violate the law.

Dated this _____ Day of _____ 20__

_____
Signature of Owner/Builder

Subscribed and sworn before me this _____ day of _____ 20__, in the county of _____State of Utah.

_____
Notary Public

NOTICE

IF YOU ARE BUILDING, OPENING, OR REMODELING ANY OF THE FOLLOWING FACILITIES:

- RESTAURANT, DELI, SNACK BAR, CATERING SERVICE, COFFEE SHOP, ICE-CREAM PARLOR, OR ANY OTHER FOOD SERVICE ESTABLISHMENT
- HOME, SUBDIVISION, R.V. PARK OR MOBILE HOME PARK NOT CONNECTED TO MUNICIPAL SEWER
- SCHOOL
- SWIMMING POOL OR SPA/HOT TUB FACILITIES FOR:
    - HOTEL/MOTEL
    - CONDO/APARTMENT BUILDINGS
    - HOME OWNERS ASSOCIATION OR PLANNED UNIT DEVELOPMENT
    - GYM OR SPORTS FITNESS CENTER
    - COMMUNITY CENTER OR MUNICIPAL POOL
    - ANY FACILITY WITH FOUR(4) OR MORE LIVING UNITS HAVING ACCESS
- TANNING FACILITY

PLEASE CONTACT THE

SOUTHWEST UTAH

PUBLIC HEALTH

DEPARTMENT

PREVENT - PROMOTE – PROTECT

Environmental Health Division

Washington County: 620 South 400 East, Box 400, ST. GEORGE, UTAH 84770 – (435) 986-2580
Iron & Beaver Counties: 260 E. DL Sargent Dr., CEDAR CITY, UTAH 84721 – (435) 586-5180
Kane County: 245 South 200 East, KANAB, UTAH 84741
Garfield County: 609 N. Main St., PANGUITCH, UTAH 84759 (435) 676-8800

(Plan review for these facilities is required by state law.)

SANTA CLARA CITY
2603 Santa Clara Drive
Santa Clara, UT 84765
(435) 673-6712 Fax: 628-7338

RELEASE OF LIABILITY

In consideration of the agreement of the City of Santa Clara to issue the undersigned property owner a Building Permit for the construction of a structure upon the real property described below, the undersigned agrees as follows:

1. I am aware that groundwater and unstable soil conditions have been found to exist in certain areas of the City of Santa Clara.
2. I acknowledge that for my own protection, I have obtained, from a competent soils engineer, a soils and groundwater test analysis of my property described below. I acknowledge it is my responsibility to cause the construction of my structure to be in strict compliance with the recommendations of the soils test analysis, and I acknowledge that the inspections performed by the City of Santa Clara will not include compliance with said soils test.
3. I hereby release the City of Santa Clara from any and all liability for damages which I or my successors in interest might suffer by reason of unstable soil conditions upon or under the property described below or by reason of my own or my agent's or contractor's violation of any applicable laws, ordinances, or city standards, and waive any and all claims against the City of Santa Clara by reason thereof.

The covenants and agreements herein made shall run with the land and shall be binding upon the heirs, successors and assigns of the undersigned.

THE REAL PROPERTY AFFECTED BY THIS AGREEMENT IS DESCRIBED AS:

Address: _____

Tax ID: SC-_____ Subdivision: _____ Phase: ____ Lot: _____

DATE: _____ _____
PROPERTY OWNER

_____
PROPERTY OWNER

STATE OF UTAH)
:SS
COUNTY OF WASHINGTON)

On this _____ day of _____, 20_____, personally appeared before me

_____ and _____, the signer's of the above

instrument, who duly acknowledged to me that he/she/they executed the same.

_____
Notary Public

_____
Residing at:

_____
My Commission Expires:

Revised 4/11

CONSTRUCTION SITE MAINTENANCE AGREEMENT

Date: _____ Permit #: **SAC**_____

I hereby am aware that the following items must be adhered to throughout construction with no violations thereof to assure the refunding of the maintenance deposit:

1. Construction sites shall be kept clean at all times. A **DUMPSTER** or approved means of containing refuse shall be on site and all objectionable debris and material must be contained therein.

2. There must be at least one (1) **TOILET FACILITY** on site which shall be maintained by the owner/contractor and used by all construction personnel during construction, unless the contractor has arranged for other such facilities located within 200 ft of site.

3. There shall be **NO PLACING OR STORING OF PORTABLE TOILETS, TRASH CONTAINERS, BUILDING MATERIALS, DIRT, GRAVEL, BROKEN CONCRETE OR DEBRIS ON SIDEWALKS**.

4. Access onto the site shall be provided by cutting the drive approach when construction begins or by creating an approved ramp which allows proper drainage. **DIRT AND/OR DEBRIS ARE NOT APPROVED MATERIALS FOR ACCESS TO LOTS!!**

3. There shall be **NO LOUD OR EXCESSIVE NOISE** in connection with the construction, (including excavation), demolition, alteration or repair of any building **before the hours of 6 AM or after 9 PM.** This shall include heavy equipment, pounding, hammering, loud music, etc.

4. **NO BUILDING OR STRUCTURE SHALL BE USED OR OCCUPIED**, and no change in the existing occupancy classification of a building or structure or portion thereof until a **Certificate of Occupancy** has been issued.

5. Construction sites must maintain **LOT IDENTIFICATION** at all times. This includes the contractor's name, site address, and permit number.

NOTE: For first offenses a verbal warning will be issued. For second and subsequent offenses, the job site will be red-tagged and a possible citation issued.

_____ **Sworn before me on this _____ day of _____, 20_____**

Contractor/Owner Signature

_____

Notary Public

_____

Print

_____

Residing at:

_____

Commission Expires

Revised: 9/08

UTR #:_____
Required by Applicant

Individual Lot Stormwater Pollution Prevention Plan (SWPPP) For Coverage under the Federal Clean Water Act

NOTICE!! This form will not be accepted without your State NOI.

Go to: http://www.deq.utah.gov/Permits/water/updes/stormwatercon.htm
Under the Category "Online Storm Water Permit Database"
Click "Application for a Storm Water Permit"

Name of Applicant: _____ **Phone:** _____

Email: _____

Construction Site Address: _____

Subdivision:_____ **Lot #:** _____

Type of Construction: ❒ New Home ❒ Pool ❒ Other:_____

Initial (Required) on each line to indicate that you have read and understand the following:

1. _____ **Select A, B, C or Own Site Plan** annotated as needed, in order to fulfill the SWPPP requirements set forth in Santa Clara City.

- ☐ **Site Plan TYPE "A" Front & Side Erosion Plan**
- ☐ **Site Plan TYPE "B" Front & Rear Erosion Plan**
- ☐ **Site Plan TYPE "C" Front Erosion Plan**
- ☐ **Own Site Plan** (provide with Building Permit Application)

2. _____ All BMPs will be constructed, installed and maintained according to the minimum standards and specifications set forth in the Santa Clara City Grading Manual, or otherwise approved by the Stormwater Coordinator, and will be in place and in working order prior to any construction activity.

3. _____ BMPs will be installed, operated and maintained to protect streams, rivers, ponds and wetlands from sedimentation and a spill prevention plan will be followed for any spills or illicit discharges that may leave the site.

4. _____ If applicable, any features of the site that are vulnerable to erosion, as well as BMPs implemented for these features, are shown on the attached Site Plan.

5. _____ All BMPs will be inspected by qualified personnel at least once every seven calendar days during active construction and within twenty-four hours after any storm event greater than 0.5 inches during a 24-hour period. Any necessary repairs or clean-up to maintain the effectiveness of the BMPs shall be made prior to the next storm event whenever practicable. If implementation before the next storm event is impracticable, the situation will be documented in the Site Plan and alternative BMPs will be implemented as soon as possible.

6. _____ Sediment deposited into or upon any street, alley, sidewalk, public roadway, storm drainage system, or public ground will be removed within two days. A contingency plan will be implemented for unforeseen erosion or sediment problems, including emergency situations caused by storms.

7. _____ Following any construction activity, final or temporary stabilization shall be completed as soon as practicable, but in no case more than fourteen days, to the surface of all perimeter controls, topsoil stockpiles, and any other disturbed or graded areas on the project site which are not being used for material storage, or on which actual construction activity is not being performed.

8. _____ Either the lot will be stabilized by the builder at the end of construction or the homeowner will be informed of the need for final stabilization.

9. _____ This form will either be posted at the construction site or made available upon request within a 24 hour period.

SITE PLAN FOR INDIVIDUAL LOTS
EROSION PLAN EXAMPLES

Reduce sediment leaving your construction site by implementing Best Management Practices (BMP's) such as:

1. Limit mud track-out onto private or public streets by parking on paved street or driveways whenever possible. If necessary, utilize a temporary gravel drive.
2. Clean up any mud that has been tracked off the construction site within 48 hours.
3. Implement sediment controls along the low sides of the property to protect adjacent waterways, storm drains or neighboring property from sedimentation.
4. Keep a clean site. Dispose of construction waste materials and debris in a dumpster or containment device. Empty dumpster if overflowing.
5. Have your portable toilet staked and anchored away from any storm drain inlets.
6. Place stock piled materials (soil, concrete, etc.) behind sediment control measures.
7. Inspect your site weekly and after rain events to find any potential problems and keep your BMP's repaired and in good working order.

For more information on erosion and sediment control refer to the BMP's provided by Santa Clara City at www.sccity.org (Utilities tab, Storm Water tab)

**Select Sediment Control Plan: *(or provide your own)*

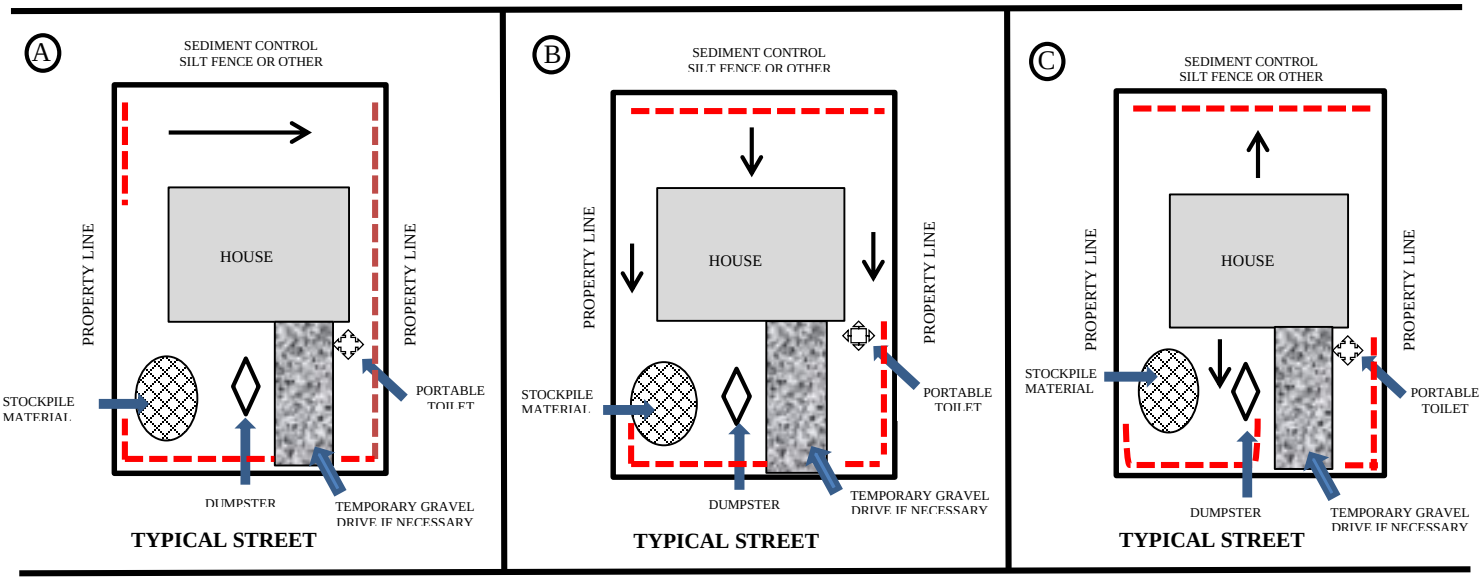

**Sediment Control Plan (circle): A B C OWN PLAN

_____ _____
Applicant Signature Date

_____ _____
Approved By Date
(City Storm Water Inspector)

WASHINGTON COUNTY
WATER CONSERVANCY DISTRICT

533 East Waterworks Dr.
St. George, Utah 84770
(435) 673-3617
http://wcwcd,state,.ut.us

RESIDENTIAL BUILDING PERMIT IMPACT FEE APPLICATION FORM AND RECEIPT

APPLICANT INFORMATION				
Name				
Address		City	State	Zip
Telephone				
Email				

OWNER INFORMATION				
Name				
Address		City	State	Zip
Telephone				

LOT INFORMATION				
Address		City	State	Zip
Subdivision			Phase	
Lot number				
Other legal description				
Serial Number				
Lot size				

□ Check if there is secondary irrigation water available from the City

I hereby certify that the above-referenced information is true and correct.

APPLICANT'S AUTHORIZED SIGNATURE:

CITY VERIFICATION

We will be charging the impact fee for secondary water when issuing the permit.

City Authorized Signature: _____

Meter size	

This will verify that the City is prepared to issue a building permit for construction on the lot described above that is

□ 10,000 sf or less

□ _____ sf

CITY AUTHORIZED SIGNATURE:

WCWCD CERTIFICATION

This will certify that the required impact fee has been paid as follows:

Amount paid	
Paid by	
Check Number	
Date paid	

□ Check if water conservation easement was executed

□ Check if there is a restrictive covenant limiting irrigated landscape

WCWCD AUTHORIZED SIGNATURE:

INSTRUCTIONS

Please read carefully before returning the completed form to the District

1. All sections must be filled in. If a section is not applicable, fill in with "N/A."
2. The City verification must be completed. Only City authorized signatures are accepted.
3. The original document must be presented to the City.
4. Relevant information concerning the legal description, lot serial number and square foot measurements of common areas may be found on the Washington County interactive map web page at http://eweb.washco.utah.gov/eaglesoftware/web/.http://atlas.utah.gov/county/washington/viewer.htm.
5. Relevant information to help calculate the impact fee may be found at http://wcwcd.state.ut.us.
6. Please confirm with District staff that the impact fee amount is correct before writing the check.
7. Checks are preferred; cash is accepted. If a check bounces, the City will red tag the building.
8. Make the check payable to "WCWCD."

SANTA CLARA CITY
BUILDING INSPECTION REQUEST
435-879-5313

PLEASE HAVE THE FOLLOWING INFORMATION READY BEFORE YOU CALL AS THIS IS A VOICEMAIL/RECORDING:

CALLER NAME: _____

CALLER PHONE NUMBER: _____

LAST 3 DIGITS OF PERMIT NUMBER: _____

ADDRESS TO BE INSPECTED: _____

TYPE OF INSPECTION REQUESTING: _____

DATE & *TIME FOR INSPECTION: _____

***TIME OF INSPECTION IS APPROXIMATE.**

**** It is recommended that you call the building inspection request line instead of the main phone number (especially on the weekends or the inspection request will be delayed 1 to 2 days). When you call the building inspection request line the requests are written on an inspection card and the inspection completed within 24 hours of the request.

NOTICE
Contractors & Owner/Builders

Required inspections on new homes, additions, remodels, garages, and any other permitted project that may apply:

1. **Footings/Piers - Exterior, Interior and Spot/Column.** All steel elevated. Engineered footing designs must have special inspections completed by Engineer
2. **Underground Plumbing** – prior to covering, water tested
3. **Underground Mechanical** – prior to covering
4. **Electrical Trench -** trench open - conduit in place 32" min. below final grade
5. **Slab/Holddowns** - all straps/hold-downs in place
6. **Foundation Walls - Reinforcing Steel** - as per engineer's plans
7. **Sewer and Water Laterals -** installed with air or water test
8. **Rough Framing** - provide truss specs at this time
9. **Rough Electrical** - installed as per electrical code
10. **Rough Mechanical** - installed as per mechanical code
11. **Rough Plumbing** - installed as per plumbing code with air or water test
12. **Rough Gas** – pressure tested
13. **Interior/Exterior Sheer Walls - OSB** - as per plans or engineer requirements
14. **Insulation -** insulation installed with vapor barrier in place
15. **Interior Sheetrock-** Installed as per manufactures recommendations
16. **Lath** - after insulation board installed and prior to first coat of stucco
17. **Permanent Power (meter set) -** system in place ready to use
18. **Drive Approach -** compaction test done by an engineer, report due at final inspection
19. **Shower Pan** – installed as per listing requirements
20. **Landscaping** – installed as per stormwater ordinance 13:24:50
21. **Final -** house complete, ready for occupancy

INSPECTION SCHEDULING: Call **879-5313** Monday thru Thursday 8 a.m. to 5 p.m. Closed Friday

MINIMUM 24-HOUR NOTICE REQUIRED!

ENDANGERED SPECIES ACT

Some species of wildlife have Federal protection through the Endangered Species Act. A number of ESA species are found in the Washington County area. It is incumbent upon the developer to investigate issues associated with these species. For more information call the US Fish and Wildlife Service in Salt Lake City or the BLM office in St. George. Issues specific to the *desert tortoise* please call the Red Cliffs Desert Reserve at 634-5756 or 634-5759.

I have read and understand the above information:

_____	_____	_____
Contractor/Owner Signature	Print	Date

GAS SIZING INSTALLATION PLAN

Date: _____ **Permit #: _____**

Installers Company: _____ **Phone #: _____**

License #: _____

Owner/Builder: _____

Project Address: _____

Subdivision: _____ Lot #: _____ Phase: _____

Fuel line sized for: **___ 4 oz. Or ___ 2 lb.** Delivery Pressure
Multiple Meter: **yes no** if yes: are the fuel lines tagged: **yes no**

FOR INSPECTIONS CALL: (435)879-5313 FAX (435)879-5298

I hereby certify that the entire mechanical fuel-line system for the structure located at the address listed above has been sized and pressure tested in accordance with the International Mechanical Code currently adopted by the State of Utah.

Installers Signature: _____

Total Length: _____

Approved by: _____ **Total C.F.H.: _____**

Building Inspector **Date** **Test Pressure: _____**

*Santa Clara City, *2603 Santa Clara Dr., *Santa Clara, UT 84765 (435)656-4690 FAX (435)879-5298

Utah 2012 IECC Compliance Checklist

Building Info

City: _____ Permit #: _____

Subdivision: _____ Builder: _____

Lot #: _____ Date: _____

Address: _____

Square Footage: _____

Whole House Pressure Test

ACH 50 @ 50Pa: _____ Code Compliance Maximum: 5 ACH

PASS: Y N

Duct Leakage Testing

Test @ Final: Y N Test @ Rough: Y N Air Handler Present: Y N

Code Compliance Maximum: SQFT _____ / 10** = _____ CFM

**If tested at rough without air handler use 7.5

Test Results System 1: CFM @ 25pa: _____

PASS: Y N

Test Results System 2: CFM @ 25Pa: _____

PASS: Y N

Compliance Tester Info

Company: _____

Certifications:

- ❒ BPI
- ❒ RESNET
- ❒ OTHER: _____

Tester Signature: _____ Date: _____

Utah State Amendment
To
International Fuel Gas Code

R156-56-709. Statewide Amendments to the IFGC

(1) The following paragraph is added at the end of Section 305.1

305.1 General. After natural gas, space and water heating appliances have been adjusted for altitude and the Btu content of the natural gas, the installer shall apply a sticker in a visible location indicating that the proper adjustments to such appliances have been made. The adjustments for altitude and the Btu content of the natural gas shall be done in accordance with the manufacturer's installation instructions and the gas utility's approved practices.

(2) Chapter 4, Section 401 General, a new section 401.9 is added as follows:

401.9 Meter protection. Gas meters shall be protected from physical damage, including falling ice and snow.

APPLIANCE ADJUSTMENT VERIFICATION

Proper adjustments for altitude and natural gas Btu content have been made to this appliance in accordance with the manufacturer's installation instructions and the gas utility practices.

Building Permit Number: ___**SAC**_____

Address: _____

Technician Name: _____

Company: _____

Date: _____

A "Green Sticker" (Appliance Adjustment Verification) will be REQUIRED by the Rough Mechanical Inspection effective January 1, 2006.

Pre-Compliance Form and QA Agreement

(Conventional Foundation)
(Good for 30 days)

Contractor: _____ License No.: _____ Phone: _____

Subdivision: _____ Phase: _____ Lot: _____

Lot Address: _____ TAX ID No.: _SC-_____

Owner: _____ Phone: _____

Soils Engineering Company providing recommendations and verifying compliance: _____

References:
1. *Geotechnical Report: _____
2. *Geotechnical Report: _____
3. *Retaining Wall/Reinforced Slope Design: _____

General Pad Foundation Requirements: _____

Required Tests/Inspections:

Residence Checklist:

- ☐ Main/Garage Footing Subgrade Compaction_____
- ☐ Basement Footing Subgrade Compaction_____
- ☐ Basement Wall Backfill Compaction Structural Areas _____
- ☐ Basement Wall Backfill Compaction Non-Structural Areas_____
- ☐ Pad Prep/Over ex Req. _____
- ☐ Utility Trench Backfill Compaction _____
- ☐ Verify Surface Drainage _____
- ☐ Other _____

Retaining Walls/Reinforce Slopes Checklist:

- ☐ Footing Subgrade Compaction_____
- ☐ Backfill Compaction_____
- ☐ Geo Grid Observation _____
- ☐ Boulder Source Approval _____
- ☐ Other_____

Seismic Site Class: A B C D E F

Owner/Contractor Acknowledgment:

I _____ (Name), being the *owner/builder* (circle one) have received a copy of this Pre-compliance Form and QA Agreement. I further understand that it is the responsibility of the owner/contractor to ensure that the recommendations provided in the above referenced geotechnical investigation report and checklist are followed. The owner/builder understands he/she is responsible to schedule a sufficient number of tests/inspections to verify the items in the above checklist. _____/_____
(Signed) (Date)

This document is a summary of pad grading and foundation subgrade preparation recommendations as well as a summary of required inspections/tests and should not be used independently of the information provided in the geotechnical investigation report.

_____ (Company Name) agrees to provide services during foundation subgrade/preparation according to 2006 IRC Section R301 requirements and the accepted engineering practices. Following completion of the services agreed upon, a foundation compliance report stamped by the professional engineer employed by the responsible firm will be provided and will state their professional opinion with regards to whether recommendations in the listed geotechnical report were followed.

*Note: Geotechnical report should be updated at least every 3 years.

Interim Geotechnical Compliance Form

(Conventional Foundation)

Contractor: _____ License No.: _____ Phone: _____

Subdivision: _____ Phase: _____ Lot: _____

Lot Address: _____ TAX ID No.: SC-_____

Owner: _____ Phone: _____

Required Tests/Inspections:	**Completed Tests/Inspections:**	**Date Complete/Initial**
Residence:	**Residence:**	
☐ Main/Garage Footing Subgrade Compaction	☐ Main/Garage Footing Subgrade Compaction	_____
☐ Basement Footings Subgrade Compaction	☐ Basement Footing Subgrade Compaction	_____
☐ Basement Wall Backfill Compaction – Structural Areas	☐ Basement Wall Backfill Compaction – Structural Areas	_____
☐ Basement Wall Backfill Compaction Non-Structural Areas	☐ Basement Wall Backfill Compaction – Non-Structural Areas	_____
☐ Pad Prep/Over excavation Required	☐ Pad Prep/Over excavation Required	_____
☐ Verify Surface Drainage	☐ Verify Surface Drainage	_____
☐ Utility Trench Backfill Compaction	☐ Utility Trench Backfill Compaction	_____
☐ Other-_____	☐ Other-_____	_____
Retaining Walls/Reinforce Slopes Checklist:	**Retaining Walls/Reinforce Slopes Checklist:**	
☐ Footing Subgrade Compaction	☐ Footing Subgrade Compaction	_____
☐ Backfill Compaction	☐ Backfill Compaction	_____
☐ Geo Grid Observation	☐ Geo Grid Observation	_____
☐ Boulder Source Approval	☐ Boulder Source Approval	_____
☐ Other-_____	☐ Other-_____	_____

Based on observations/inspections made by _____(*Testing Firm*), the completed items checked above are in general accordance with the approved construction documents.

Interim Geotechnical Compliance Form

(Deep Foundation)

Contractor: _____ License No.: _____ Phone: _____

Subdivision: _____ Phase: _____ Lot: _____

Lot Address: _____ TAX ID No.: _SC-_____

Owner: _____ Phone: _____

Required Tests/Inspections:	**Completed Tests/Inspections:**	**Date Complete/Initial**
Residence:	**Residence:**	
☐ Caisson/Pier Inspection	☐ Caisson/Pier Inspection	_____
☐ Rebar Inspection – Caissons	☐ Rebar Inspection – Caissons	_____
☐ Rebar Inspection – Beams	☐ Rebar Inspection – Beams	_____
☐ Concrete Cylinders	☐ Concrete Cylinders	_____
☐ Void Inspection	☐ Void Inspection	_____
☐ Flatwork Inspection	☐ Flatwork Inspection	_____
☐ Backfill Compaction	☐ Backfill Compaction	_____
☐ Verify Surface Drainage	☐ Verify Surface Drainage	_____
☐ Utility Trench Backfill Compaction	☐ Utility Trench Backfill Compaction	_____
☐ Other-_____	☐ Other-_____	_____
Retaining Walls/Reinforce Slopes Checklist:	**Retaining Walls/Reinforce Slopes Checklist:**	
☐ Footing Subgrade Compaction	☐ Footing Subgrade Compaction	_____
☐ Backfill Compaction	☐ Backfill Compaction	_____
☐ Geo Grid Observation	☐ Geo Grid Observation	_____
☐ Boulder Source Approval	☐ Boulder Source Approval	_____
☐ Other-_____	☐ Other-_____	_____

Based on observations/inspections made by _____(*Testing Firm*), the completed items checked above are in general accordance with the approved construction documents.

ENCROACHMENT REQUIREMENTS

Santa Clara City has ordinances regulating the use and maintenance of City streets, sidewalks, curbs and gutters. The following is a list of requirements (For additional details please refer to City Code of Ordinances.):

1. **NO PLACING OR STORING OF PORTABLE TOILETS, TRASH DUMPSTERS, BUILDING MATERIALS, DIRT, GRAVEL, BROKEN CONCRETE OR DEBRIS ON SIDEWALKS**

Placement of these items on the sidewalks causes sight distance problems for traffic, interferes with pedestrian and wheelchair traffic and can be a liability and a hazard.

2. **ACCESS ONTO CONSTRUCTION SITES SHALL BE PROVIDED BY EITHER CUTTING THE DRIVE APPROACH WHEN CONSTRUCTION BEGINS OR BY CREATING AN APPROVED RAMP**

If the precise location of the drive approach is unknown, a ramp may be permitted providing it is properly built of wood or metal, allows proper drainage and does not extend onto the asphalt. Example: Two (2) 4X4 wood or steel posts. **DIRT and/or DEBRIS are <u>NOT</u> approved materials for ramps.** When water flows, dirt and debris in the gutters cause storm drains to plug resulting in flooding of private property and public roadways**.**

3. **DRIVE APPROACH INSPECTION AND COMPACTION TEST REQUIRED**

Contractors must follow the City's design standards when installing drive approaches and sidewalks. **Drive approach inspections <u>must</u> be completed by the inspector prior to pouring concrete.** Compaction Test Report done by the soils engineer must be on site at time of inspection or received by the City prior to inspection.

4. **ENCROACHMENT PERMITS**

A **separate encroachment permit** must be obtained for the temporary storage of materials, equipment or when work is done within any City right-of-way. This includes, for example, the placement of landscaping, building or fencing materials on City walkways, curbs and gutters or streets, as well as curb or asphalt cuts of any kind and the removal and replacement of sidewalks.

New home construction is not required to have a separate encroachment permit for the drive approach – the compaction test and inspection, however, are still required.

Santa Clara City
2603 Santa Clara Drive
Santa Clara, UT 84765
(435) 656-4690 Fax (435) 879-5298

LOT IDENTIFICATION

The following lot identification sign must be placed on the property immediately after the start of construction:

[Type a quote from the document or the summary of an interesting point. You can position the text box anywhere in the document. Use the Drawing Tools tab to change the formatting of the pull quote text box.]

NO SIGN SHALL BE POSTED IN THE CLEAR VIEW AREA OF CORNER LOTS!!!!

1) **Minimum Sign Size: 2' x 3' showing:**
   - **Street Address**
   - **Contractor's Name**
   - **Permit #**
   - **Lot #**

2) **Legible, weatherproofed 2" lettering**

3) **Permit Pouch (provided by City)**
   Securely attached to sign or sign post

4) **Permit posted in pouch**

5) **Inspection slips posted in pouch**

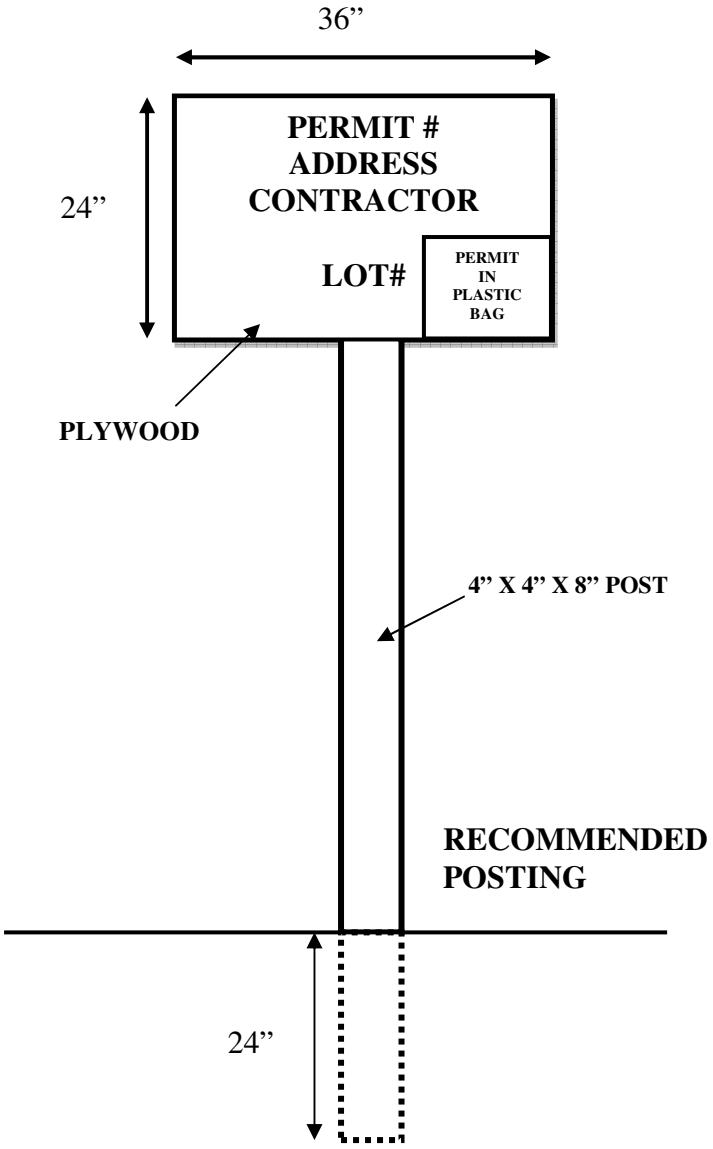

Santa Clara City
2603 Santa Clara Dr
Santa Clara, Utah 84765

FINAL INSPECTION CHECKLIST

This checklist is **NOT** a complete list of the items which will be inspected. It is **ONLY** a list of the items which are commonly overlooked.

EXTERIOR

- Final Foundation Compliance Letter: Provided from soils engineer
- Stucco Certificate: Provided from installer
- Insulation Certificate: Posted at electrical panel
- Permanent House Numbers: 3" min. mounted on home on *contrasting background* & visible from street
- Brass Caps: On *all* sewer clean-outs
- Hand and Guardrails: Where required
- Veneer, Paint & Caulking: Entirely complete.
- Exterior Outlets: Must be G.F.C.I protected and outlets in a wet location must have a bubble cover installed
- Water Meter Valve Box: Set 2" above grade, cleaned off and not damaged
- A/C Units: Disconnects with liquid tight conduit & fittings. Bracket on grey flex from A/C unit to disconnect
- Landings: 36" landing required outside all exterior doors. (A door may open at a landing that is not more than 8" lower than the floor level, provided the door does not swing over the landing)
- Hose Bibs: All hose bibs must be “anti-siphon” type
- Safety Grates: Required over any window well located in a patio, or adjacent to a walkway
- Final Grade: 6" clearance from earth to wood (weep screed), 2" from concrete to weep screed, retention of any slope exceeding 2 to 1, rough grade - sloped 2% away from house, all drainage to slope towards nearest public way.
- Sidewalk: All broken, cracked, chipped sidewalk panels replaced
- Job Site Clean-Up: All debris cleaned from lot. Sidewalk and gutter cleaned. Dumpster and port-a-jon removed.
- Landscaping Installed
- Final Certification: Stucco, Insulation, Backflow, Green Sticker (Mechanical), HVAC Complaince and Termite

This checklist is **NOT** a complete list of items which will be inspected. It is **ONLY** a list of items which are commonly overlooked.

INTERIOR

- Electrical Panels: Circuits to be identified with permanent ink.
- GFCI Outlets: Kitchen, wet bar, bathroom, garage, exterior, unfinished basement, and crawl space outlets to be GFCI protected, bedrooms with Arc-Fault protection.
- Jetted-Tubs: Access provided to jet-tub motor. Motor to be G.F.C.I protected.
- Combustion Air: Adequate combustion-air for furnace and water heater
- Smoke Detectors: In all required locations, with battery backup, and wired in series
- Water Heater: Pressure Regulator (water), main shutoff, thermal expansion tank or device, vent connector screwed or taped, single wall in room only. Double wall concealed only with 1" clearance to combustibles, ½" slope on connector. Draft hood screwed down, seismic strap.
- Door Into Garage: Shall be minimum 1 3/8" solid wood or metal 20-minute rated, self-closing, and self-latching
- Attic: Access located in garage shall be fire rated and have hinges and latches securely fastened to lids and frames. Attic and crawl space adequately accessible and ventilated, platform and walkway visible from access, insulation installed per Model Energy Code and provide installer's certificate.
- Stairways: Open on one or more sides shall have guardrails as per 2006 IRC
- Handrails: Required on stairways with four or more risers. Minimum 1 ½ inches between wall and handrail, ends shall be returned or shall have rounded terminations or bends.
- Tempered Glass: Installed in or within 12" of egress doors; within 18" of walking surface and other locations as set forth in the 2006 IRC
- Clean Outs: All clean-outs for plumbing fixtures exposed

Site Plan Example

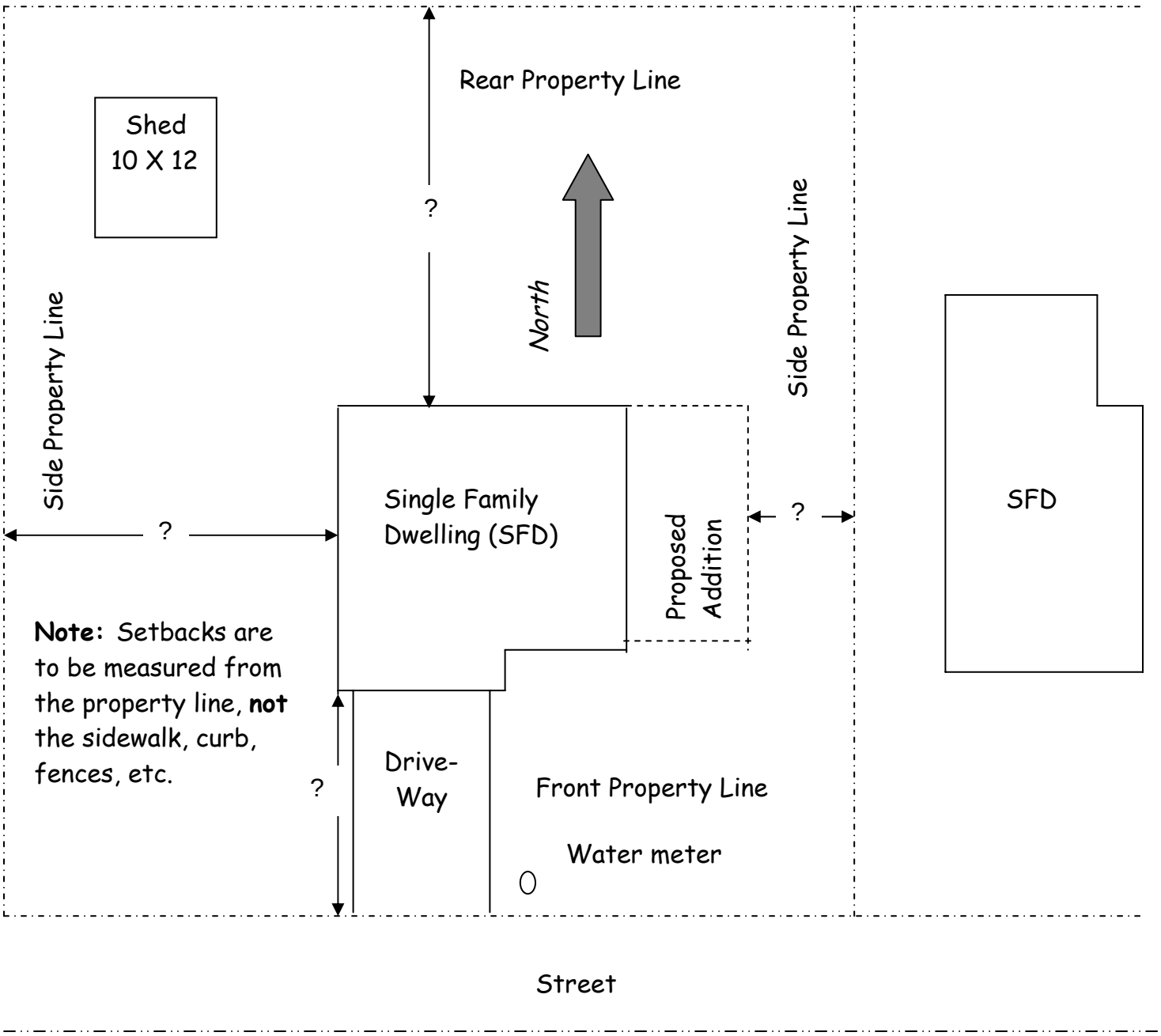

Accessory Building – 200 sq. ft. or smaller with no electrical or plumbing does not need a building permit but setbacks must still be met.

IRC-R302 – Fire-Resistant Construction

R302.1 – Exterior Walls. Construction, projections, openings and penetrations of *exterior walls* of *dwellings* and ***accessory buildings*** shall comply with Table R302.1 (see back)

Exceptions:

1. Walls, projections, openings or penetrations in walls perpendicular to the line used to determine the *fire separation distance.*
2. Walls of *dwellings* and ***accessory structures*** located on the same lot.
3. Detached tool sheds and storage sheds, playhouses and similar structures exempted from permits are not required to provide wall protection based on location on the lot. Projections beyond the *exterior wall* shall not extend over the *lot line.*
4. Detached garages accessory to a *dwelling* located within 2 feet of a *lot line* are permitted to have roof eave projections not exceeding 4 inches.
5. Foundation vents installed in compliance with this code are permitted.

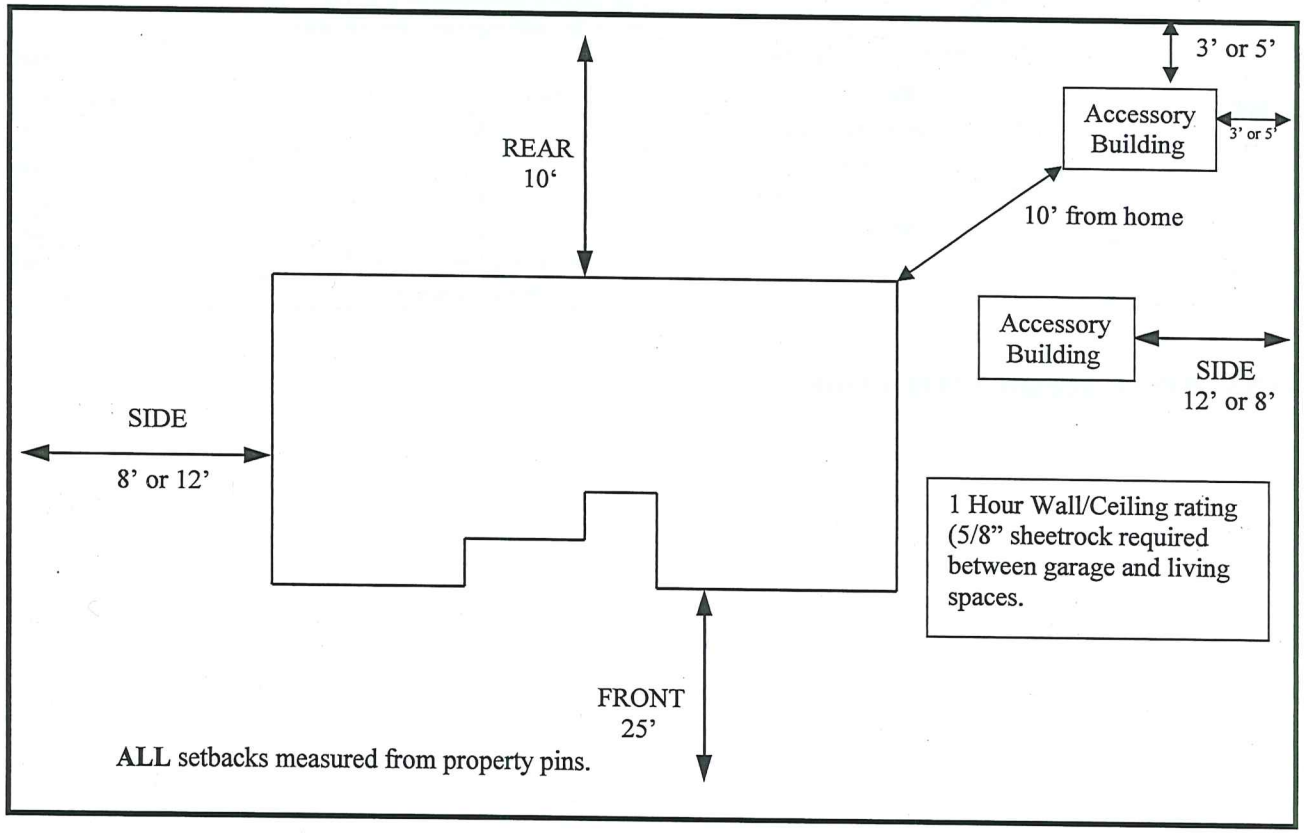

Santa Clara City Building Dept. ❖ 2603 Santa Clara Dr. ❖ Santa Clara, UT 84765
Phone: (435) 656-4690 ext. 216❖ Fax: (435) 879-5298 ❖ e-mail: cbundy@sccity.org

TABLE R302.1
EXTERIOR WALLS

EXTERIOR WALL ELEMENT		MINIMUM FIRE-RESISTANCE RATING	MINIMUM FIRE SEPARATION DISTANCE
Walls	(Fire-resistance rated)	1 hour-tested in accordance with ASTM E 119 or UL 263 with exposure form both sides	< 5 feet
	(Not fire-resistance rated)	0 hours	≥ 5 feet
Projections	(Fire-resistance rated)	1 hour on the underside	≥ 2 feet to 5 feet
	(Not fire-resistance rated)	0 hours	5 feet
Openings in walls	Not allowed	N/A	< 3 feet
	25% maximum of wall area	0 hours	3 feet
	Unlimited	0 hours	5 feet
Penetrations	All	Comply with Section R317.3	< 5 feet
		None required	5 feet

2009 INTERNATIONAL RESIDENTIAL CODE

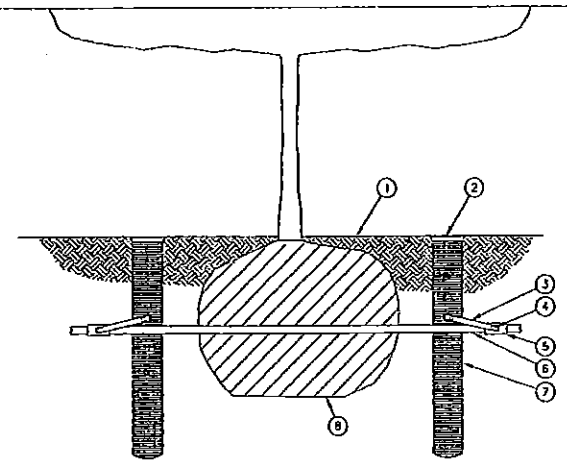

1. FINISH GRADE/TOP OF MULCH
2. ROOT WATERING SERIES:
   RAIN BIRD RWS SERIES
   (1 OF 2 SHOWN, MORE POSSIBLE)
3. SWING ASSEMBLY (INCLUDED)
   (1 OF 2 SHOWN, MORE POSSIBLE)
4. 1/2-INCH MALE NPT INLET (INCLUDED)
   (1 OF 2 SHOWN, MORE POSSIBLE)
5. PVC SCH 40 TEE OR EL
   (1 OF 2 SHOWN, MORE POSSIBLE)
6. PVC OR POLYETHYLENE LATERAL PIPE
7. OPTIONAL RWS SAND SOCK (RWS-SOCK)
   FOR SANDY SOILS (1 OF 2 SHOWN, MORE POSSIBLE)
8. PLANT ROOT BALL

NOTES:

1. POSITION 2-3 UNITS (OR MORE) EVENLY SPACED AROUND PLANT. FOR NEW TREES PLACE NEAR ROOT BALL. FOR EXISTING TREES PLACE HALF THE DISTANCE BETWEEN CANOPY EDGE AND TREE TRUNK
2. INSTALL PRODUCT WITH TOP EVEN WITH GROUND SURFACE.
3. RWS SERIES AVAILABLE IN THE FOLLOWING MODELS:
   - RWS (NO BUBBLER/EMITTER INCLUDED)
   - RWS-B-1401 (0.25 GPM)
   - RWS-B-C-1402 (0.5 GPM, CHECK VALVE)
   - RWS-B-C-1404 (1.0 GPM, CHECK VALVE)
   - RWS-B-C-1401 (0.25 GPM, CHECK VALVE)
   - RWS-B-X-1401 (0.25 GPM, 18" SWING ASSEMBLY)
   - RWS-B-1402 (0.5 GPM)
   - RWS-B-C-1408 (2.0 GPM, CHECK VALVE)
4. WHEN INSTALLING IN EXTREMELY HARD OR CLAY SOILS, ADD ¾" GRAVEL UNDER AND AROUND THE UNIT TO ALLOW FASTER WATER INFILTRATION AND ROOT PENETRATION.
5. ONCE RWS HAS BEEN INSTALLED FILL THE BASKET WITH PEA GRAVEL BEFORE LOCKING LID.

D ROOT WATERING SYSTEM RWS 2/2/10
N.T.S. INSTALLATION FOR TREES

X-RWS Tree Installation.dwg

Utah 2012 IECC Compliance Checklist

Building Info

City: _____ Permit #: _____

Subdivision: _____ Builder: _____

Lot #: _____ Date: _____

Address: _____

Square Footage: _____

Whole House Pressure Test

ACH 50 @ 50Pa: _____ Code Compliance Maximum: 5 ACH

PASS: Y N

Duct Leakage Testing

Test @ Final: Y N Test @ Rough: Y N Air Handler Present: Y N

Code Compliance Maximum: SQFT _____ / 10** = _____ CFM

**If tested at rough without air handler use 7.5

Test Results System 1: CFM @ 25pa: _____

PASS: Y N

Test Results System 2: CFM @ 25Pa: _____

PASS: Y N

Compliance Tester Info

Company: _____

Certifications:

- ❒ BPI
- ❒ RESNET
- ❒ OTHER: _____

Tester Signature: _____ Date: _____

with either the *International Mechanical Code* or *International Residential Code*, as applicable.

Exceptions:

1. Air-impermeable spray foam products shall be permitted to be applied without additional joint seals.
2. Where a duct connection is made that is partially inaccessible, three screws or rivets shall be equally spaced on the exposed portion of the joint so as to prevent a hinge effect.
3. Continuously welded and locking-type longitudinal joints and seams in ducts operating at static pressures less than 2 inches of water column (500 Pa) pressure classification shall not require additional closure systems.

Duct tightness shall be verified by either of the following:

1. Postconstruction test: Total leakage shall be less than or equal to 10 cfm (283L/min) per 100 square feet (9.29 m^2) of conditioned floor area when tested at a pressure differential of 0.1 inches w.g. (25 Pa) across the entire system, including the manufacturer's air handler enclosure. All register boots shall be taped or otherwise sealed during the test.
2. Rough-in test: Total leakage shall be less than or equal to 10 cfm (283L/min) per 100 square feet (9.29 m^2) of conditioned floor area when tested at a pressure differential of 0.1 inches w.g. (25 Pa) across the system, including the manufacturer's air handler enclosure. All registers shall be taped or otherwise sealed during the test. If the air handler is not installed at the time of the test, total leakage shall be less than or equal to 7.5 cfm (212L/min) per 100 square feet (9.29 m^2) of conditioned floor area.

Exception: The total leakage test is not required for systems with all air handlers and at least 50% of all ducts (measured by length) located entirely within the building thermal envelope

R403.2.2.1 Sealed air handler. Air handlers shall have a manufacturer's designation for an air leakage of no more than 2 percent of the design air flow rate when tested in accordance with ASHRAE 193.

R403.2.3 Building cavities (Mandatory). Building framing cavities shall not be used as ducts ~~or plenums.~~

R403.3 Mechanical system piping insulation (Mandatory). Mechanical system piping capable of carrying fluids above 105°F (41°C) or below 55°F (13°C) shall be insulated to a minimum of R-3.

R403.3.1 Protection of piping insulation. Piping insulation exposed to weather shall be protected from damage, including that caused by sunlight, moisture, equipment maintenance, and wind, and shall provide shielding from solar radiation that can cause degradation of the material. Adhesive tape shall not be permitted.

R403.4 Service hot water systems. Energy conservation measures for service hot water systems shall be in accordance with Sections R403.4.1 and R403.4.2.

R403.4.1 Circulating hot water systems (Mandatory). Circulating hot water systems shall be provided with an automatic or readily *accessible* manual switch that can turn off the hot-water circulating pump when the system is not in use.

R403.4.2 Hot water pipe insulation (Prescriptive). Insulation for hot water pipe with a minimum thermal resistance (*R*-value) of R-3 shall be applied to the following:

1. Piping larger than $^3/_4$ inch nominal diameter.
2. Piping serving more than one dwelling unit.
3. ~~Piping from the water heater to kitchen outlets.~~
4. Piping located outside the conditioned space.
5. Piping from the water heater to a distribution manifold.
6. Piping located under a floor slab.
7. Buried piping.
8. Supply and return piping in recirculation systems other than demand recirculation systems.
9. ~~Piping with run lengths greater than the maximum run lengths for the nominal pipe diameter given in Table R403.4.2.~~

~~All remaining piping shall be insulated to at least R-3 or meet the run length requirements of Table R403.4.2.~~

~~TABLE R403.4.2~~
~~MAXIMUM RUN LENGTH (feet)[a]~~

Nominal Pipe Diameter of Largest Diameter Pipe in the Run (inch)	~~$^3/_8$~~	~~$^1/_2$~~	~~$^3/_4$~~	~~> $^3/_4$~~
~~Maximum Run Length~~	~~30~~	~~20~~	~~10~~	~~5~~

~~For SI: 1 inch = 25.4 mm, 1 foot 304.8 mm.~~

~~a. Total length of all piping from the distribution manifold or the recirculation loop to a point of use.~~

R403.5 Mechanical ventilation (Mandatory). ~~The building shall be provided with ventilation that meets the requirements~~

TABLE R403.5.1
MECHANICAL VENTILATION SYSTEM FAN EFFICACY

FAN LOCATION	AIR FLOW RATE MINIMUM (CFM)	MINIMUM EFFICACY (CFM/WATT)	AIR FLOW RATE MAXIMUM (CFM)
Range hoods	Any	2.8 cfm/watt	Any
In-line fan	Any	2.8 cfm/watt	Any
Bathroom, utility room	10	1.4 cfm/watt	< 90
Bathroom, utility room	90	2.8 cfm/watt	Any

For SI: 1 cfm = 28.3 L/min.

SANTA CLARA CITY October 2014

Roof drains, Landscaping drains and Ground water drain systems shall be installed in a manner to drain water over the curb and into the gutter. Gutters shall not be drilled, cut or notched. Drainage systems shall not be designed to allow water to drain in back of the sidewalk or into park strips. Pop ups shall be encased in concrete and designed to direct water to flow over the curb and into the gutter.

Designs are the responsibility of the contractor or installer and may vary depending on site conditions. The photo below is an example of an approved installation. Contact the Building department for any questions or design approval. Installations to be approved by Santa Clara City Building Inspector before final C/O is issued.